Gas-actuated thermometer with switch contact
Stainless steel version
Model TGS73

For further approvals, see page 15

Applications

- Control and regulation of industrial processes
- Monitoring of plants and switching of circuits
- Universally suitable for machine building, plant, tank, equipment manufacturing and food industry
- Temperature measurement without medium contact
- Mounting in instrument panels, control cabinets, instrument panels

Special features

- Instruments meet the highest standards of measurement technology
- Case and stem from stainless steel
- For external mounting on pipes and tanks
- Instruments with inductive contacts for use in hazardous areas
- Instruments with contacts for PLC applications

Fig. top: lower mount
Fig. bottom: back mount

Description

Wherever the process temperature has to be indicated on-site or in places that are difficult to access and, at the same time, circuits need to be switched, the gas-actuated thermometer with switch contacts finds its use.

Due to the wide variety of possible designs, the model TGS73 gas-actuated thermometers can be perfectly adapted to any process connection or location. With the adjustable stem and dial version, the case can be adjusted precisely to the desired viewing angle.
With the contact bulb version (without direct contact with the medium), the temperature can be measured and switched even when the pipe diameter is extremely small. The contact bulb is intended for external mounting on pipes and tanks. When mounting this thermometer version, it must be ensured that the contact bulb is in contact with the measuring location over its complete length.

Switch contacts (electrical alarm contacts) make or break circuits dependent upon the pointer position of the indicating measuring instrument. The switch contacts are adjustable over the full measuring range. The instrument pointer (actual value pointer) moves freely across the entire scale range, independent of the setting. The set pointer can be adjusted via the window using a removable adjustment key (mounted on the cable socket). Switch contacts consisting of several contacts can also be set to a single set point. Contact actuation is made when the actual value pointer travels beyond or below the desired set point.

As switch contacts, magnetic snap-action contacts, inductive contacts and electronic contacts are available. Inductive contacts can be used in hazardous areas. For triggering programmable logic controllers (PLC), electronic contacts can be used.

Smart in sensing

Specifications

Basic information	
Standard	DIN 16196
Nominal size in mm ["]	■ 100 [4] ■ 160 [6]
Window	Laminated safety glass, polycarbonate
Connection location	■ Back mount (axial) ■ Lower mount (radial) ■ Back mount, adjustable stem and dial ■ Version with capillary
Connection design	→ For drawings, see page 16
S	Standard (threaded connection) [1)]
1	Plain stem (without thread)
2	Male nut
3	Union nut
4	Compression fitting (sliding on stem)
5	Union nut and loose threaded connection
6	Compression fitting (can be adjusted on either capillary or spiral protective sleeve)
7	Compression fitting on the case [1)]
"Adjustable stem and dial" case version	Swivelling 90° and rotatable 360°
Damping, case filling	■ Without ■ With liquid damping
Material (non-wetted)	
Case, bayonet bezel	Stainless steel 304
Pointer	Aluminium, black, micro adjustment
Articulated joint "adjustable stem and dial"	Stainless steel 304
Dial	Aluminium (white)

1) Not applicable to version with capillary

Measuring element		
Type of measuring element	Gas-pressure inert gas filling, physiologically safe	
Working range		
Constant loading (1 year)	Measuring range per DIN 16196	
Short time (max. 24 h)	Scale range per DIN 16196	
Capillary		
Diameter	Ø 2 mm [0.08 in]	
Spiral protective sleeve	Ø 7 mm [0.28 in]	
Length	Capillary without spiral protective sleeve	Max. 60 m [197 ft]
	Capillary with spiral protective sleeve	Max. 40 m [131 ft]
	Capillary with spiral protective sleeve and PVC coating	Max. 20 m [66 ft]
Minimum bending radius	Capillary without spiral protective sleeve	6 mm [0.24 in]
	Capillary with spiral protective sleeve	20 mm [0.79 in]
	Capillary with spiral protective sleeve and PVC coating	30 mm [1.18 in]
Material (in contact with the environment)	Stainless steel 316	
Mounting options	■ Surface mounting flange, stainless steel ■ Instrument mounting bracket, aluminium die-casting ■ Panel mounting flange, stainless steel	
Contact bulb		
Dimensions	120 x 22 x 12 mm [4.72 x 0.87 x 0.47 in]	
Mounting types	■ Mounting on pipes ■ Mounting on tanks	

Measuring element	
Material (non-wetted)	Stainless steel 316

Accuracy specifications	
Accuracy	Class 1 per DIN 16196 at 23 °C ±10 °C ambient temperature

Scale range in °C	Measuring range [1] in °C	Scale interval in °C	Error limit per DIN 16196 in °C
-80 ... +60	-60 ... +40	2	3.0
-60 ... +40	-50 ... +30	1	1.5
-40 ... +60	-30 ... +50	1	1.5
-30 ... +50	-20 ... +40	1	1.5
-30 ... +70	-20 ... +60	1	1.5
-20 ... +40	-10 ... +30	1	1.5
-20 ... +60	-10 ... +50	1	1.5
-20 ... +80	-10 ... +70	1	1.5
-20 ... +100	-10 ... +90	1	1.5
-20 ... +120	0 ... 100	2	3.0
0 ... 60	10 ... 50	1	1.5
0 ... 80	10 ... 70	1	1.5
0 ... 100	10 ... 90	1	1.5
0 ... 120	10 ... 110	2	3.0
0 ... 150	20 ... 130	2	3.0
0 ... 160	20 ... 140	2	3.0
0 ... 200	20 ... 180	2	3.0
0 ... 250	30 ... 220	5	3.75
0 ... 300	30 ... 270	5	7.5
0 ... 400	50 ... 350	5	7.5
0 ... 500	50 ... 450	5	7.5
0 ... 600	100 ... 500	10	15.0
0 ... 700	100 ... 600	10	15.0

1) The limits of the measuring range are indicated on the dial by two triangular marks. Only within this range is the stated error limit valid per DIN 16196.

Unless otherwise specified, the instrument will be delivered with the adjustable switch points factory-set as follows:

- Single contact — Measuring range start
- Double contact — Start and end of the measuring range

Further details on: scale range		
Unit	■ °C ■ °F ■ °C/°F (dual scale) ■ °F/°C (dual scale)	
Dial		
Scale graduation	■ Single scale ■ Dual scale	
Scale colour	Single scale	Black
	Dual scale	Red
		→ Other colours on request
Pointer		
Version	Adjustable pointer	

Design	1			2 and 3			4 and 5			S		
Stem diameter in mm [in]	6 [0.24]	8 [0.32]	≥ 10 [0.40]	6 [0.24]	8 [0.32]	≥ 10 [0.40]	6 [0.24]	8 [0.32]	≥ 10 [0.40]	6 [0.24]	8 [0.32]	≥ 10 [0.40]
Scale range in °C	Minimum insertion length in mm [in]											
Back mount and lower mount												
-80 ... +60	95 [3.74]	60 [2.36]	60 [2.36]	95 [3.74]	60 [2.36]	60 [2.36]	90 [3.54]	60 [2.36]	60 [2.36]	110 [4.33]	75 [2.95]	75 [2.95]
-60 ... +40	105 [4.13]	70 [2.76]	60 [2.36]	105 [4.13]	70 [2.76]	60 [2.36]	100 [3.74]	65 [2.56]	60 [2.36]	120 [4.72]	85 [3.35]	75 [2.95]
-40 ... +60	105 [4.13]	70 [2.76]	60 [2.36]	105 [4.13]	70 [2.76]	60 [2.36]	100 [3.74]	65 [2.56]	60 [2.36]	120 [4.72]	85 [3.35]	75 [2.95]
-30 ... +50	125 [4.92]	75 [2.95]	60 [2.36]	125 [4.92]	75 [2.95]	60 [2.36]	120 [4.72]	70 [2.76]	60 [2.36]	140 [5.51]	90 [3.54]	75 [2.95]
-30 ... +70	105 [4.13]	70 [2.76]	60 [2.36]	80 [3.15]	60 [2.36]	60 [2.36]	95 [3.74]	60 [2.36]	60 [2.36]	95 [3.74]	75 [2.95]	75 [2.95]
-20 ... +40	135 [5.31]	95 [3.74]	65 [2.56]	115 [4.53]	70 [2.76]	60 [2.36]	125 [4.92]	85 [3.35]	60 [2.36]	125 [4.92]	85 [3.35]	75 [2.95]
-20 ... +60	125 [4.92]	85 [3.35]	60 [2.36]	125 [4.92]	85 [3.35]	60 [2.36]	120 [4.72]	80 [3.15]	60 [2.36]	140 [5.51]	100 [3.74]	75 [2.95]
-20 ... +80	105 [4.13]	70 [2.76]	60 [2.36]	105 [4.13]	70 [2.76]	60 [2.36]	100 [3.74]	65 [2.56]	60 [2.36]	120 [4.72]	85 [3.35]	75 [2.95]
-20 ... +100	100 [3.74]	65 [2.56]	60 [2.36]	80 [3.15]	60 [2.36]	60 [2.36]	90 [3.54]	60 [2.36]	60 [2.36]	90 [3.54]	75 [2.95]	75 [2.95]
-20 ... +120	100 [3.74]	65 [2.56]	60 [2.36]	75 [2.95]	60 [2.36]	60 [2.36]	90 [3.54]	60 [2.36]	60 [2.36]	90 [3.54]	75 [2.95]	75 [2.95]
0 ... 60	155 [6.10]	95 [3.74]	75 [2.95]	155 [6.10]	95 [3.74]	75 [2.95]	150 [5.91]	90 [3.54]	70 [2.76]	170 [6.69]	110 [4.33]	90 [3.54]
0 ... 80	125 [4.92]	85 [3.35]	60 [2.36]	125 [4.92]	85 [3.35]	60 [2.36]	120 [4.72]	80 [3.15]	60 [2.36]	140 [5.51]	100 [3.74]	75 [2.95]
0 ... 100	115 [4.53]	75 [2.95]	60 [2.36]	115 [4.53]	75 [2.95]	60 [2.36]	110 [4.33]	70 [2.76]	60 [2.36]	130 [5.12]	90 [3.54]	75 [2.95]
0 ... 120	95 [3.74]	70 [2.76]	60 [2.36]	95 [3.74]	70 [2.76]	60 [2.36]	90 [3.54]	65 [2.56]	60 [2.36]	110 [4.33]	85 [3.35]	75 [2.95]
0 ... 150	100 [3.74]	65 [2.56]	60 [2.36]	75 [2.95]	60 [2.36]	60 [2.36]	90 [3.54]	60 [2.36]	60 [2.36]	90 [3.54]	75 [2.95]	75 [2.95]
0 ... 160	95 [3.74]	60 [2.36]	60 [2.36]	95 [3.74]	60 [2.36]	60 [2.36]	90 [3.54]	60 [2.36]	60 [2.36]	110 [4.33]	75 [2.95]	75 [2.95]
0 ... 200	95 [3.74]	60 [2.36]	60 [2.36]	95 [3.74]	60 [2.36]	60 [2.36]	90 [3.54]	60 [2.36]	60 [2.36]	110 [4.33]	75 [2.95]	75 [2.95]
0 ... 250	75 [2.95]	60 [2.36]	60 [2.36]	75 [2.95]	60 [2.36]	60 [2.36]	70 [2.76]	60 [2.36]	60 [2.36]	90 [3.54]	75 [2.95]	75 [2.95]
0 ... 300	105 [4.13]	90 [3.54]	90 [3.54]	95 [3.74]	80 [3.15]	80 [3.15]	70 [2.76]	60 [2.36]	60 [2.36]	90 [3.54]	75 [2.95]	75 [2.95]
0 ... 400	105 [4.13]	90 [3.54]	90 [3.54]	95 [3.74]	80 [3.15]	80 [3.15]	70 [2.76]	60 [2.36]	60 [2.36]	90 [3.54]	75 [2.95]	75 [2.95]
0 ... 500	165 [6.50]	130 [5.12]	130 [5.12]	155 [6.10]	120 [4.72]	120 [4.72]	125 [4.92]	90 [3.54]	90 [3.54]	150 [5.91]	115 [4.53]	115 [4.53]
0 ... 600	145 [5.71]	130 [5.12]	130 [5.12]	135 [5.31]	120 [4.72]	120 [4.72]	105 [4.13]	90 [3.54]	90 [3.54]	130 [5.12]	115 [4.53]	115 [4.53]
0 ... 700	165 [6.50]	145 [5.71]	130 [5.12]	155 [6.10]	135 [5.31]	120 [4.72]	125 [4.92]	105 [4.13]	90 [3.54]	150 [5.91]	130 [5.12]	115 [4.53]

Design	1			2 and 3			4 and 5			S		
Stem diameter in mm [in]	6 [0.24]	8 [0.32]	≥ 10 [0.40]	6 [0.24]	8 [0.32]	≥ 10 [0.40]	6 [0.24]	8 [0.32]	≥ 10 [0.40]	6 [0.24]	8 [0.32]	≥ 10 [0.40]
Scale range in °C	Minimum insertion length in mm [in]											
Back mount, adjustable stem and dial												
-80…+60	80 [3.15]	60 [2.36]	60 [2.36]	80 [3.15]	60 [2.36]	60 [2.36]	90 [3.54]	60 [2.36]	60 [2.36]	100 [3.74]	65 [2.56]	65 [2.56]
-60…+40	90 [3.54]	60 [2.36]	60 [2.36]	90 [3.54]	60 [2.36]	60 [2.36]	100 [3.74]	65 [2.56]	60 [2.36]	110 [4.33]	75 [2.95]	65 [2.56]
-40…+60	90 [3.54]	60 [2.36]	60 [2.36]	90 [3.54]	60 [2.36]	60 [2.36]	100 [3.74]	65 [2.56]	60 [2.36]	110 [4.33]	75 [2.95]	65 [2.56]
-30…+50	110 [4.33]	60 [2.36]	60 [2.36]	110 [4.33]	60 [2.36]	60 [2.36]	120 [4.72]	70 [2.76]	60 [2.36]	130 [5.12]	80 [3.15]	65 [2.56]
-30…+70	90 [3.54]	60 [2.36]	60 [2.36]	90 [3.54]	60 [2.36]	60 [2.36]	95 [3.74]	60 [2.36]	60 [2.36]	105 [4.13]	70 [2.76]	60 [2.36]
-20…+40	120 [4.72]	80 [3.15]	60 [2.36]	120 [4.72]	80 [3.15]	60 [2.36]	125 [4.92]	85 [3.35]	60 [2.36]	135 [5.32]	95 [3.74]	65 [2.56]
-20…+60	110 [4.33]	70 [2.76]	60 [2.36]	110 [4.33]	70 [2.76]	60 [2.36]	120 [4.72]	80 [3.15]	60 [2.36]	130 [5.12]	90 [3.54]	65 [2.56]
-20…+80	90 [3.54]	60 [2.36]	60 [2.36]	90 [3.54]	60 [2.36]	60 [2.36]	100 [3.74]	65 [2.56]	60 [2.36]	110 [4.33]	75 [2.95]	65 [2.56]
-20…+100	85 [3.35]	60 [2.36]	60 [2.36]	85 [3.35]	60 [2.36]	60 [2.36]	90 [3.54]	60 [2.36]	60 [2.36]	100 [3.74]	65 [2.56]	60 [2.36]
-20…+120	85 [3.35]	60 [2.36]	60 [2.36]	85 [3.35]	60 [2.36]	60 [2.36]	90 [3.54]	60 [2.36]	60 [2.36]	100 [3.74]	65 [2.56]	60 [2.36]
0…60	140 [5.51]	80 [3.15]	60 [2.36]	140 [5.51]	80 [3.15]	60 [2.36]	150 [5.91]	90 [3.54]	70 [2.76]	160 [6.29]	100 [3.74]	80 [3.15]
0…80	110 [4.33]	70 [2.76]	60 [2.36]	110 [4.33]	70 [2.76]	60 [2.36]	120 [4.72]	80 [3.15]	60 [2.36]	130 [5.12]	90 [3.54]	65 [2.56]
0…100	100 [3.74]	60 [2.36]	60 [2.36]	100 [3.74]	60 [2.36]	60 [2.36]	110 [4.33]	70 [2.76]	60 [2.36]	120 [4.72]	80 [3.15]	65 [2.56]
0…120	80 [3.15]	60 [2.36]	60 [2.36]	80 [3.15]	60 [2.36]	60 [2.36]	90 [3.54]	65 [2.56]	60 [2.36]	100 [3.74]	75 [2.95]	65 [2.56]
0…150	85 [3.35]	60 [2.36]	60 [2.36]	85 [3.35]	60 [2.36]	60 [2.36]	90 [3.54]	60 [2.36]	60 [2.36]	100 [3.74]	65 [2.56]	60 [2.36]
0…160	80 [3.15]	60 [2.36]	60 [2.36]	80 [3.15]	60 [2.36]	60 [2.36]	90 [3.54]	60 [2.36]	60 [2.36]	100 [3.74]	65 [2.56]	65 [2.56]
0…200	80 [3.15]	60 [2.36]	60 [2.36]	80 [3.15]	60 [2.36]	60 [2.36]	90 [3.54]	60 [2.36]	60 [2.36]	100 [3.74]	65 [2.56]	65 [2.56]
0…250	60 [2.36]	60 [2.36]	60 [2.36]	60 [2.36]	60 [2.36]	60 [2.36]	70 [2.76]	60 [2.36]	60 [2.36]	80 [3.15]	65 [2.56]	65 [2.56]
0…300	60 [2.36]	60 [2.36]	60 [2.36]	60 [2.36]	60 [2.36]	60 [2.36]	70 [2.76]	60 [2.36]	60 [2.36]	80 [3.15]	65 [2.56]	65 [2.56]
0…400	60 [2.36]	60 [2.36]	60 [2.36]	60 [2.36]	60 [2.36]	60 [2.36]	70 [2.76]	60 [2.36]	60 [2.36]	80 [3.15]	65 [2.56]	65 [2.56]
0…500	120 [4.72]	85 [3.35]	85 [3.35]	120 [4.72]	85 [3.35]	85 [3.35]	90 [3.54]	60 [2.36]	60 [2.36]	135 [5.32]	100 [3.74]	100 [3.74]
0…600	100 [3.74]	85 [3.35]	85 [3.35]	100 [3.74]	85 [3.35]	85 [3.35]	70 [2.76]	60 [2.36]	60 [2.36]	115 [4.53]	100 [3.74]	100 [3.74]
0…700	120 [4.72]	100 [3.74]	85 [3.35]	120 [4.72]	100 [3.74]	85 [3.35]	90 [3.54]	70 [2.76]	60 [2.36]	135 [5.32]	115 [4.53]	100 [3.74]

Design	1			2 and 3			4 and 5			S		
Stem diameter in mm [in]	6 [0.24]	8 [0.32]	≥ 10 [0.40]	6 [0.24]	8 [0.32]	≥ 10 [0.40]	6 [0.24]	8 [0.32]	≥ 10 [0.40]	6 [0.24]	8 [0.32]	≥ 10 [0.40]
Scale range in °C	Minimum insertion length in mm [in]											
Capillary ≤ 5 m [16 ft]												
-80…+60	115 [4.53]	80 [3.15]	70 [2.76]	110 [4.33]	75 [2.95]	65 [2.56]	100 [3.74]	65 [2.56]	60 [2.36]	-	-	-
-60…+40	135 [5.32]	95 [3.74]	70 [2.76]	130 [5.12]	90 [3.54]	65 [2.56]	120 [4.72]	80 [3.15]	60 [2.36]	-	-	-
-40…+60	135 [5.32]	95 [3.74]	70 [2.76]	130 [5.12]	90 [3.54]	65 [2.56]	120 [4.72]	80 [3.15]	60 [2.36]	-	-	-
-30…+50	145 [5.71]	105 [4.13]	75 [2.95]	140 [5.51]	100 [3.74]	70 [2.76]	130 [5.12]	90 [3.54]	60 [2.36]	-	-	-
-30…+70	90 [3.54]	60 [2.36]	70 [2.76]	90 [3.54]	60 [2.36]	60 [2.36]	105 [4.13]	65 [2.56]	60 [2.36]	-	-	-
-20…+40	120 [4.72]	70 [2.76]	60 [2.36]	125 [4.92]	75 [2.95]	60 [2.36]	135 [5.32]	65 [2.56]	60 [2.36]	-	-	-
-20…+60	145 [5.71]	105 [4.13]	75 [2.95]	140 [5.51]	100 [3.74]	70 [2.76]	130 [5.12]	90 [3.54]	60 [2.36]	-	-	-
-20…+80	135 [5.32]	95 [3.74]	70 [2.76]	130 [5.12]	90 [3.54]	65 [2.56]	120 [4.72]	80 [3.15]	60 [2.36]	-	-	-
-20…+100	85 [3.35]	60 [2.36]	70 [2.76]	85 [3.35]	60 [2.36]	60 [2.36]	95 [3.74]	65 [2.56]	60 [2.36]	-	-	-
-20…+120	75 [2.95]	60 [2.36]	70 [2.76]	80 [3.15]	60 [2.36]	60 [2.36]	90 [3.54]	60 [2.36]	60 [2.36]	-	-	-
0…60	165 [6.50]	115 [4.53]	85 [3.35]	160 [6.29]	110 [4.33]	80 [3.15]	150 [5.91]	100 [3.74]	70 [2.76]	-	-	-
0…80	155 [6.10]	105 [4.13]	75 [2.95]	150 [5.91]	100 [3.74]	70 [2.76]	140 [5.51]	90 [3.54]	60 [2.36]	-	-	-
0…100	135 [5.32]	95 [3.74]	70 [2.76]	130 [5.12]	90 [3.54]	65 [2.56]	120 [4.72]	80 [3.15]	60 [2.36]	-	-	-
0…120	125 [4.92]	85 [3.35]	70 [2.76]	120 [4.72]	80 [3.15]	65 [2.56]	110 [4.33]	70 [2.76]	60 [2.36]	-	-	-
0…150	75 [2.95]	60 [2.36]	70 [2.76]	80 [3.15]	60 [2.36]	60 [2.36]	90 [3.54]	60 [2.36]	60 [2.36]	-	-	-
0…160	115 [4.53]	80 [3.15]	70 [2.76]	110 [4.33]	75 [2.95]	65 [2.56]	100 [3.74]	65 [2.56]	60 [2.36]	-	-	-
0…200	105 [4.13]	80 [3.15]	70 [2.76]	100 [3.74]	75 [2.95]	65 [2.56]	90 [3.54]	65 [2.56]	60 [2.36]	-	-	-
0…250	105 [4.13]	70 [2.76]	70 [2.76]	100 [3.74]	65 [2.56]	65 [2.56]	90 [3.54]	60 [2.36]	60 [2.36]	-	-	-
0…300	95 [3.74]	70 [2.76]	70 [2.76]	90 [3.54]	65 [2.56]	65 [2.56]	80 [3.15]	60 [2.36]	60 [2.36]	-	-	-
0…400	95 [3.74]	70 [2.76]	70 [2.76]	90 [3.54]	65 [2.56]	65 [2.56]	80 [3.15]	60 [2.36]	60 [2.36]	-	-	-
0…500	115 [4.53]	70 [2.76]	70 [2.76]	110 [4.33]	65 [2.56]	65 [2.56]	100 [3.74]	60 [2.36]	60 [2.36]	-	-	-
0…600	95 [3.74]	70 [2.76]	70 [2.76]	90 [3.54]	65 [2.56]	65 [2.56]	80 [3.15]	60 [2.36]	60 [2.36]	-	-	-
0…700	115 [4.53]	80 [3.15]	70 [2.76]	110 [4.33]	75 [2.95]	65 [2.56]	100 [3.74]	65 [2.56]	60 [2.36]	-	-	-

Design	1			2 and 3			4 and 5			S		
Stem diameter in mm [in]	6 [0.24]	8 [0.32]	≥ 10 [0.40]	6 [0.24]	8 [0.32]	≥ 10 [0.40]	6 [0.24]	8 [0.32]	≥ 10 [0.40]	6 [0.24]	8 [0.32]	≥ 10 [0.40]
Scale range in °C	Minimum insertion length in mm [in]											
Capillary > 5 ... 10 m [16 ... 33 ft]												
-80…+60	135 [5.32]	95 [3.74]	70 [2.76]	130 [5.12]	90 [3.54]	65 [2.56]	120 [4.72]	80 [3.15]	60 [2.36]	-	-	-
-60…+40	155 [6.10]	105 [4.13]	75 [2.95]	150 [5.91]	100 [3.74]	70 [2.76]	140 [5.51]	90 [3.54]	60 [2.36]	-	-	-
-40…+60	155 [6.10]	105 [4.13]	75 [2.95]	150 [5.91]	100 [3.74]	70 [2.76]	140 [5.51]	90 [3.54]	60 [2.36]	-	-	-
-30…+50	165 [6.50]	115 [4.53]	85 [3.35]	160 [6.29]	110 [4.33]	80 [3.15]	150 [5.91]	100 [3.74]	70 [2.76]	-	-	-
-30…+70	120 [4.72]	70 [2.76]	70 [2.76]	120 [4.72]	65 [2.56]	60 [2.36]	130 [5.12]	80 [3.15]	60 [2.36]	-	-	-
-20…+40	140 [5.51]	80 [3.15]	70 [2.76]	145 [5.71]	85 [3.35]	60 [2.36]	155 [6.10]	95 [3.74]	65 [2.56]	-	-	-
-20…+60	175 [6.89]	115 [4.53]	85 [3.35]	170 [6.69]	110 [4.33]	80 [3.15]	160 [6.29]	100 [3.74]	70 [2.76]	-	-	-
-20…+80	155 [6.10]	105 [4.13]	75 [2.95]	150 [5.91]	100 [3.74]	70 [2.76]	140 [5.51]	90 [3.54]	60 [2.36]	-	-	-
-20…+100	105 [4.13]	70 [2.76]	70 [2.76]	105 [4.13]	60 [2.36]	60 [2.36]	115 [4.53]	75 [2.95]	60 [2.36]	-	-	-
-20…+120	95 [3.74]	70 [2.76]	70 [2.76]	100 [3.74]	60 [2.36]	60 [2.36]	110 [4.33]	70 [2.76]	60 [2.36]	-	-	-
0…60	185 [7.28]	125 [4.92]	95 [3.74]	180 [7.08]	120 [4.72]	90 [3.54]	170 [6.69]	110 [4.33]	80 [3.15]	-	-	-
0…80	175 [6.89]	115 [4.53]	85 [3.35]	170 [6.69]	110 [4.33]	80 [3.15]	160 [6.29]	100 [3.74]	70 [2.76]	-	-	-
0…100	155 [6.10]	105 [4.13]	85 [3.35]	150 [5.91]	100 [3.74]	80 [3.15]	140 [5.51]	90 [3.54]	70 [2.76]	-	-	-
0…120	145 [5.71]	105 [4.13]	75 [2.95]	140 [5.51]	100 [3.74]	70 [2.76]	130 [5.12]	90 [3.54]	60 [2.36]	-	-	-
0…150	95 [3.74]	70 [2.76]	70 [2.76]	100 [3.74]	60 [2.36]	60 [2.36]	110 [4.33]	70 [2.76]	60 [2.36]	-	-	-
0…160	135 [5.32]	95 [3.74]	70 [2.76]	130 [5.12]	90 [3.54]	65 [2.56]	120 [4.72]	80 [3.15]	60 [2.36]	-	-	-
0…200	125 [4.92]	85 [3.35]	70 [2.76]	120 [4.72]	80 [3.15]	65 [2.56]	110 [4.33]	70 [2.76]	60 [2.36]	-	-	-
0…250	125 [4.92]	85 [3.35]	70 [2.76]	120 [4.72]	80 [3.15]	65 [2.56]	110 [4.33]	70 [2.76]	60 [2.36]	-	-	-
0…300	115 [4.53]	80 [3.15]	70 [2.76]	110 [4.33]	75 [2.95]	65 [2.56]	100 [3.74]	65 [2.56]	60 [2.36]	-	-	-
0…400	115 [4.53]	80 [3.15]	70 [2.76]	110 [4.33]	75 [2.95]	65 [2.56]	100 [3.74]	65 [2.56]	60 [2.36]	-	-	-
0…500	135 [5.32]	95 [3.74]	70 [2.76]	130 [5.12]	90 [3.54]	65 [2.56]	120 [4.72]	80 [3.15]	60 [2.36]	-	-	-
0…600	115 [4.53]	80 [3.15]	70 [2.76]	110 [4.33]	75 [2.95]	65 [2.56]	100 [3.74]	65 [2.56]	60 [2.36]	-	-	-
0…700	145 [5.71]	95 [3.74]	70 [2.76]	140 [5.51]	90 [3.54]	65 [2.56]	130 [5.12]	80 [3.15]	60 [2.36]	-	-	-

Design	1			2 and 3			4 and 5			S		
Stem diameter in mm [in]	6 [0.24]	8 [0.32]	≥ 10 [0.40]	6 [0.24]	8 [0.32]	≥ 10 [0.40]	6 [0.24]	8 [0.32]	≥ 10 [0.40]	6 [0.24]	8 [0.32]	≥ 10 [0.40]
Scale range in °C	Minimum insertion length in mm [in]											
Capillary > 10 ... 15 m [33 ... 49 ft]												
-80…+60	155 [6.10]	105 [4.13]	85 [3.35]	150 [5.91]	100 [3.74]	80 [3.15]	140 [5.51]	90 [3.54]	70 [2.76]	-	-	-
-60…+40	175 [6.89]	115 [4.53]	85 [3.35]	170 [6.69]	110 [4.33]	80 [3.15]	160 [6.29]	100 [3.74]	70 [2.76]	-	-	-
-40…+60	175 [6.89]	115 [4.53]	85 [3.35]	170 [6.69]	110 [4.33]	80 [3.15]	160 [6.29]	100 [3.74]	70 [2.76]	-	-	-
-30…+50	185 [7.28]	125 [4.92]	95 [3.74]	180 [7.08]	120 [4.72]	90 [3.54]	170 [6.69]	110 [4.33]	80 [3.15]	-	-	-
-30…+70	130 [5.12]	75 [2.95]	60 [2.36]	130 [5.12]	80 [3.15]	60 [2.36]	145 [5.71]	90 [3.54]	65 [2.56]	-	-	-
-20…+40	160 [6.29]	95 [3.74]	70 [2.76]	165 [6.50]	95 [3.74]	60 [2.36]	175 [6.89]	105 [4.13]	75 [2.95]	-	-	-
-20…+60	185 [7.28]	125 [4.92]	95 [3.74]	180 [7.08]	120 [4.72]	90 [3.54]	170 [6.69]	110 [4.33]	80 [3.15]	-	-	-
-20…+80	175 [6.89]	115 [4.53]	85 [3.35]	170 [6.69]	110 [4.33]	80 [3.15]	160 [6.29]	100 [3.74]	70 [2.76]	-	-	-
-20…+100	120 [4.72]	75 [2.95]	70 [2.76]	125 [4.92]	80 [3.15]	60 [2.36]	135 [5.32]	90 [3.54]	60 [2.36]	-	-	-
-20…+120	120 [4.72]	70 [2.76]	70 [2.76]	120 [4.72]	80 [3.15]	60 [2.36]	135 [5.32]	90 [3.54]	60 [2.36]	-	-	-
0…60	205 [8.07]	135 [5.32]	95 [3.74]	200 [7.87]	130 [5.12]	90 [3.54]	190 [7.48]	120 [4.72]	80 [3.15]	-	-	-
0…80	195 [7.68]	125 [4.92]	95 [3.74]	190 [7.48]	120 [4.72]	90 [3.54]	180 [7.08]	110 [4.33]	80 [3.15]	-	-	-
0…100	175 [6.89]	115 [4.53]	85 [3.35]	170 [6.69]	110 [4.33]	80 [3.15]	160 [6.29]	100 [3.74]	70 [2.76]	-	-	-
0…120	165 [6.50]	115 [4.53]	85 [3.35]	160 [6.29]	110 [4.33]	80 [3.15]	150 [5.91]	100 [3.74]	70 [2.76]	-	-	-
0…150	120 [4.72]	70 [2.76]	70 [2.76]	120 [4.72]	80 [3.15]	60 [2.36]	135 [5.32]	90 [3.54]	60 [2.36]	-	-	-
0…160	155 [6.10]	105 [4.13]	85 [3.35]	150 [5.91]	100 [3.74]	80 [3.15]	140 [5.51]	90 [3.54]	70 [2.76]	-	-	-
0…200	145 [5.71]	105 [4.13]	75 [2.95]	140 [5.51]	100 [3.74]	70 [2.76]	130 [5.12]	90 [3.54]	60 [2.36]	-	-	-
0…250	145 [5.71]	95 [3.74]	75 [2.95]	140 [5.51]	90 [3.54]	70 [2.76]	130 [5.12]	80 [3.15]	60 [2.36]	-	-	-
0…300	135 [5.32]	95 [3.74]	70 [2.76]	130 [5.12]	90 [3.54]	65 [2.56]	120 [4.72]	80 [3.15]	60 [2.36]	-	-	-
0…400	135 [5.32]	95 [3.74]	70 [2.76]	130 [5.12]	90 [3.54]	65 [2.56]	120 [4.72]	80 [3.15]	60 [2.36]	-	-	-
0…500	135 [5.32]	95 [3.74]	70 [2.76]	130 [5.12]	90 [3.54]	65 [2.56]	120 [4.72]	80 [3.15]	60 [2.36]	-	-	-
0…600	135 [5.32]	95 [3.74]	70 [2.76]	130 [5.12]	90 [3.54]	65 [2.56]	120 [4.72]	80 [3.15]	60 [2.36]	-	-	-
0…700	175 [6.89]	105 [4.13]	75 [2.95]	170 [6.69]	100 [3.74]	70 [2.76]	160 [6.29]	90 [3.54]	60 [2.36]	-	-	-

Design	1			2 and 3			4 and 5			S		
Stem diameter in mm [in]	6 [0.24]	8 [0.32]	≥ 10 [0.40]	6 [0.24]	8 [0.32]	≥ 10 [0.40]	6 [0.24]	8 [0.32]	≥ 10 [0.40]	6 [0.24]	8 [0.32]	≥ 10 [0.40]
Scale range in °F	Minimum insertion length in mm [in]											
Back mount and lower mount												
0 ... 200	105 [4.13]	70 [2.76]	60 [2.36]	80 [3.15]	60 [2.36]	60 [2.36]	95 [3.74]	60 [2.36]	60 [2.36]	95 [3.74]	75 [2.95]	75 [2.95]
0 ... 250	100 [3.74]	65 [2.56]	60 [2.36]	75 [2.95]	60 [2.36]	60 [2.36]	90 [3.54]	60 [2.36]	60 [2.36]	90 [3.54]	75 [2.95]	75 [2.95]
0 ... 500	60 [2.36]	60 [2.36]	60 [2.36]	60 [2.36]	60 [2.36]	60 [2.36]	65 [2.56]	60 [2.36]	60 [2.36]	75 [2.95]	75 [2.95]	75 [2.95]
Back mount, adjustable stem and dial												
0…200	90 [3.54]	60 [2.36]	60 [2.36]	90 [3.54]	60 [2.36]	60 [2.36]	95 [3.74]	60 [2.36]	60 [2.36]	105 [4.13]	70 [2.76]	60 [2.36]
0…250	85	60 [2.36]	60 [2.36]	85	60 [2.36]	60 [2.36]	90 [3.54]	60 [2.36]	60 [2.36]	100 [3.74]	65 [2.56]	60 [2.36]
0…500	60 [2.36]	60 [2.36]	60 [2.36]	60 [2.36]	60 [2.36]	60 [2.36]	65 [2.56]	60 [2.36]	60 [2.36]	75 [2.95]	60 [2.36]	60 [2.36]
Capillary ≤ 5 m [16 ft]												
0…200	90 [3.54]	60 [2.36]	70 [2.76]	95 [3.74]	60 [2.36]	60 [2.36]	105 [4.13]	70 [2.76]	60 [2.36]	-	-	-
0…250	80 [3.15]	60 [2.36]	70 [2.76]	80 [3.15]	60 [2.36]	60 [2.36]	90 [3.54]	60 [2.36]	60 [2.36]	-	-	-
0…500	60 [2.36]	70 [2.76]	70 [2.76]	60 [2.36]	60 [2.36]	60 [2.36]	75 [2.95]	60 [2.36]	60 [2.36]	-	-	-
Capillary > 5 ... 10 m [16 ... 33 ft]												
0…200	125 [4.92]	70 [2.76]	70 [2.76]	125 [4.92]	80 [3.15]	60 [2.36]	140 [5.51]	90 [3.54]	60 [2.36]	-	-	-
0…250	95 [3.74]	60 [2.36]	60 [2.36]	100 [3.74]	60 [2.36]	60 [2.36]	110 [4.33]	70 [2.76]	60 [2.36]	-	-	-
0…500	80 [3.15]	70 [2.76]	70 [2.76]	80 [3.15]	60 [2.36]	60 [2.36]	95 [3.74]	60 [2.36]	60 [2.36]	-	-	-
Capillary > 10 ... 15 m [33 ... 49 ft]												
0…200	130 [5.12]	75 [2.95]	70 [2.76]	135 [5.32]	80 [3.15]	60 [2.36]	145 [5.71]	90 [3.54]	65	-	-	-
0…250	120 [4.72]	70 [2.76]	70 [2.76]	120 [4.72]	80 [3.15]	60 [2.36]	135 [5.32]	90 [3.54]	60 [2.36]	-	-	-
0…500	100 [3.74]	70 [2.76]	70 [2.76]	100 [3.74]	60 [2.36]	60 [2.36]	115 [4.53]	75 [2.95]	60 [2.36]	-	-	-

Process connection	
Thread size	■ Plain, without thread ■ G ½ B ■ ½ NPT ■ G ½ female ■ ½ NPT female ■ M20 x 1.5 ■ M24 x 1.5 female
	→ Other threads on request
Material (**non-wetted**)	Stainless steel 316
Stem	
Diameter	■ 6 mm [0.24 in] ■ 8 mm [0.31 in] ■ 10 mm [0.39 in] ■ 12 mm [0.47 in]
	→ Other diameters on request
Material (wetted)	Stainless steel 316
Thermowell / Protection tube	In principle, the operation of a mechanical thermometer is possible without a thermowell / protection tube with low process-side loading (low pressure, low viscosity and low flow rates). However, in order to enable exchanging the thermometer during operation (e.g. instrument replacement or calibration) and to ensure a better protection of the measuring instrument and also the plant and the environment, it is advisable to use a thermowell / protection tube from the extensive WIKA portfolio.
	→ For further information on the wake frequency calculation of the thermowell / protection tube, see technical information IN 00.15.

Output signal	
Type of contact	■ Magnetic snap-action contact, model 821, see page 11 ■ Inductive contact, model 831, see page 12 ■ Electronic contact, model 830 E, see page 13
Switching technology	
Magnetic snap-action contact, model 821	■ No control unit and no auxiliary power required ■ Direct switching up to 250 V, 1 A
Inductive contact, model 831	■ Suitable for use in hazardous areas with corresponding control unit (model 904.xx) ■ Long service life due to non-contact switching ■ Low influence on the indication accuracy ■ Fail-safe switching at high switching frequency ■ Insensitive to corrosion ■ Also available in safety version
Electronic contact, model 830 E	■ For direct triggering of a programmable logic controller (PLC) ■ Long service life due to non-contact switching ■ Low influence on the indication accuracy ■ Fail-safe switching at high switching frequency ■ Insensitive to corrosion
Contact setting	■ Contact adjustable, adjustment key attached to cable socket ■ Contacts fixed, without adjustment lock ■ Contact adjustment lock leaded (tamper-proof) ■ Contact adjustment key fixed

Output signal: magnetic snap-action contact, model 821	
Connection method	Magnetic snap-action contact
Number of switch contacts	Max. 3 switch contacts
Switching function	Separate circuits with ≥ 2 switches The switching function of each switch is indicated by index 1, 2 or 3
Model 821.1	Normally open (clockwise pointer motion)
Model 821.2	Normally closed (clockwise pointer motion)
Model 821.3	Change-over contacts (normally closed or normally open simultaneously at the set point)
Switch point setting	Set pointers of the contact thermometers are freely adjustable over the full scale range
Setting range (recommended)	■ 25 ... 75 % of span ■ 0 ... 100 %, on request
Distance between switch points	Recommended minimum distance between 2 contacts: 20 % of span
Switch hysteresis	2 ... 5 % (typical)
Switching current	0.02 ... 0.3 A (resistive load) Permissible switch-on and switch-off current: ≤ 0.5 A
Switching voltage	AC/DC 24 ... 250 V
Rated operating voltage U_{eff}	≤ 250 V
Rated operating current	
Switch-on current	≤ 0.5 A
Switch-off current	≤ 0.5 A
Continuous current	≤ 0.3 A
Switching power	
Unfilled instruments	≤ 30 W, ≤ 50 VA
Filled instruments	≤ 20 W, ≤ 20 VA
Contact material	Silver-nickel, gold-plated

For magnetic snap-action contacts, it does not make sense to test the display, around the set limit values, in the range ±5 % of the measuring span, because the magnet has an influence on the indication accuracy.

Recommended contact load with resistive and inductive loads

Switching voltage	Unfilled instruments			Filled instruments		
	Resistive load		Inductive load	Resistive load		Inductive load
	Direct current	Alternating current	cos φ > 0.7	Direct current	Alternating current	cos φ > 0.7
DC 220 V / AC 230 V	100 mA	120 mA	65 mA	65 mA	90 mA	40 mA
DC 110 V / AC 110 V	200 mA	240 mA	130 mA	130 mA	180 mA	85 mA
DC 48 V / AC 48 V	300 mA	450 mA	200 mA	190 mA	330 mA	130 mA
DC 24 V / AC 24 V	400 mA	600 mA	250 mA	250 mA	450 mA	150 mA

→ For further information on switch contacts, see data sheet IN 00.48

Output signal: Inductive contact, model 831	
Connection method	Inductive contact
Number of switch contacts	Max. 3 switch contacts
Switching function	Contact versions: ■ 831-N ■ 831-SN, safety version [1)] ■ 831-S1N, safety version [1)], inverted signal The switching function of the switch is indicated by index 1, 2 or 3.
Model 831.1	Normally open (clockwise pointer motion)
Model 831.2	Normally closed (clockwise pointer motion)
Model 831.3	Change-over contacts (normally closed or normally open simultaneously at the set point)
Switch point setting	Set pointers of the contact thermometers are freely adjustable over the full scale range
Setting range (recommended)	10 ... 90 % of the scale range (0 ... 100 % on request)
Distance between switch points	Up to 2 contacts can be set to an identical set point. For a version with 3 contacts this is not possible. The left (1st) or right (3rd) contact may not be set to the same set point as the other 2 contacts. The required displacement is approx. 30°, optionally to the right or to the left.
Switching current	Depending on the isolating amplifier/control unit used, see data sheet AC 08.04
Switching voltage	Depending on the isolating amplifier/control unit used, see data sheet AC 08.04
Switching power	Depending on the isolating amplifier/control unit used, see data sheet AC 08.04
Permissible temperature ranges in hazardous areas	
T6	-20 ... +60 °C [-4 ... +140 °F]
T5 ... T1	-20 ... +70 °C [-4 ... +158 °F]
T135 °C	-20 ... +70 °C [-4 ... +158 °F]

1) Only operate with a corresponding isolating amplifier (model 904.3x), see data sheet AC 08.04.

Associated isolating amplifiers/control units

Model	Version	Ex version
904.28 KFU8 - SR2 - Ex1.W	1 contact	Yes
904.29 KFU8 - SR2 - Ex2.W	2 contacts	Yes
904.30 KHA6 - SH - Ex1	1 contact	Yes - Safety version
904.33 KFD2 - SH - Ex1	1 contact	Yes - Safety version
904.25 MSR 010-I	1 contact	No
904.26 MSR 020-I	2 contacts	No
904.27 MSR 011-I	Two-point control	No

→ For further information on switch contacts, see technical information IN 00.48

Output signal: electronic contact, model 830 E	
Connection method	Electronic contact (PNP transistor)
Number of switch contacts	Max. 3 switch contacts
Switching function	Contact versions: ■ 2-wire system ■ 3-wire system The switching function of the switch is indicated by index 1, 2 or 3.
Model 830 E.1	Normally open (clockwise pointer motion)
Model 830 E.2	Normally closed (clockwise pointer motion)
Setting range (recommended)	■ 10 ... 90 % of the scale range ■ 0 ... 100 %, on request
Distance between switch points	Up to 2 contacts can be set to an identical set point. For a version with 3 contacts this is not possible. The left (1st contact) or right (3rd contact) contact may not be set to the same set point as the other two contacts. The required displacement is approx. 30°, optionally to the right or to the left.
Switching current	≤ 100 mA
Switching voltage	DC 10 ... 30 V
Type of output	PNP transistor
Residual ripple	Max. 10 %
No-load current	≤ 10 mA
Residual current	≤ 100 µA
Voltage drop (with $I_{max.}$)	≤ 0.7 V
Reverse polarity protection	Conditional U_B (the switched output 3 or 4 must never be set directly to minus)
Anti-inductive protection	1 kV, 0.1 ms, 1 kΩ
Oscillator frequency	Approx. 1,000 kHz
EMC	Per EN 60947-5-2

2-wire system

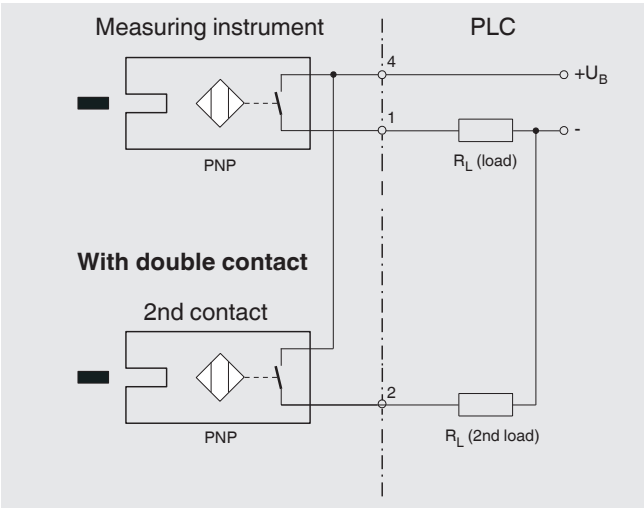

3-wire system

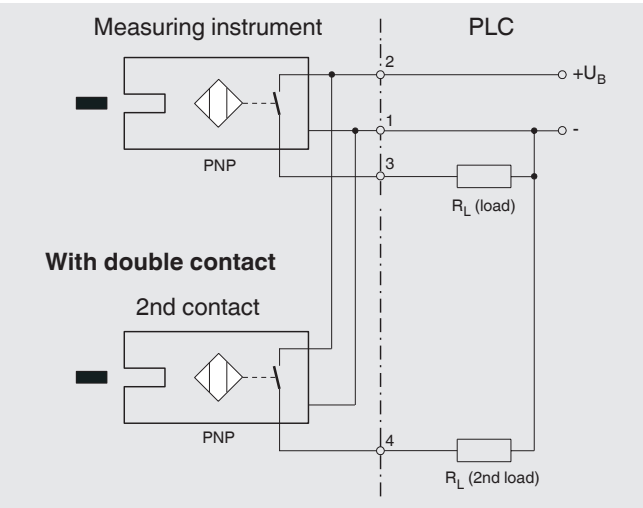

→ For further information on switch contacts, see technical information IN 00.48

Electrical connection	
Connection type	■ Cable socket, black ■ Per VDE 0110 insulation group C/250 V ■ Cable gland M20 x 1.5 ■ Connector ■ Rear cable outlet
	→ Other connection types on request
Wire cross-section	6 screw terminals + PE for conductor cross-section 2.5 mm^2
Cable diameter	7 ... 13 mm [0.28 ... 0.51 in], see dimensions on page 28
Pin assignment	The pin assignment is given on the product label of the instrument. Connection terminals and ground terminal are appropriately marked.
Material	PA 6 (polyamide)

Operating conditions	
Ambient temperature range (at the case) [1]	-20 … +60 °C [-4 ... +140 °F]
Storage temperature range [1]	
Without liquid damping	-50 ... +70 °C [-58 ... +158 °F]
With liquid damping	-40 ... +70 °C [-40 ... +158 °F]
Max. operating pressure at stem	Max. 25 bar [362.59 psi], static
Ingress protection (IP code) per IEC/EN 60529	■ IP65 ■ IP66

1) The permissible temperatures for hazardous areas depend on the contact model 831, see permissible temperature ranges on page 12). These must not be exceeded at the instrument either, for details see operating instructions. If necessary, measures for cooling (e.g. measuring location insulation) have to be taken.

Approvals

Approvals included in the scope of delivery

Logo	Description	Country
CE	**EU declaration of conformity**	European Union
	EMC directive EN 61326 emission (group 1, class B) and immunity (industrial environments)	
	Low Voltage Directive	
	RoHS directive	

Optional approvals

Logo	Description	Country
Ex	**EU declaration of conformity**	European Union
	ATEX directive [1)] Hazardous areas - Ex ia Zone 1 gas II 2G Ex ia IIC T6/T5/T4 Gb Zone 21 dust II 2D Ex ia IIIB T85°C/T95°C/T100°C/T135°C Db	
IEC IECEx	**IECEx** [1)] Hazardous areas - Ex ia Zone 1 gas Ex ia IIC T6/T5/T4 Gb Zone 21 dust Ex ia IIIB T85°C/T95°C/T100°C/T135°C Db	International
EAC Ex	**EAC**	Eurasian Economic Community
	EMC directive	
	Low Voltage Directive	
	Hazardous areas [1)]	
	KazInMetr Metrology, measurement technology	Kazakhstan
-	**MTSCHS** Permission for commissioning	Kazakhstan
	Ex Ukraine Hazardous areas	Ukraine
	Uzstandard Metrology, measurement technology	Uzbekistan
CANspec	**NEPSI** Hazardous areas	China
-	**CRN** Safety (e.g. electr. safety, overpressure, ...)	Canada

1) Only for instruments with inductive contact model 831

Certificates

Certificates	
Certificates	■ 2.2 test report ■ 3.1 inspection certificate
Calibration	DAkkS calibration certificate

→ For approvals and certificates, see website

Connection locations

Legend

G	Connection thread	C	Clearance cable socket to centre of case
i	Thread length (incl. collar)	l_1	Insertion length
Ø D_1	Case diameter	l_2	Active length
Ø d	Stem diameter	l_F	Capillary length
Ø d_1	Pitch circle diameter	F_{XX}	Clearance to stem
Ø d_2	Mounting flange diameter	SW	Spanner width
Ø d_4	Diameter of the sealing collar		
b	Overall instrument height		

Back mount

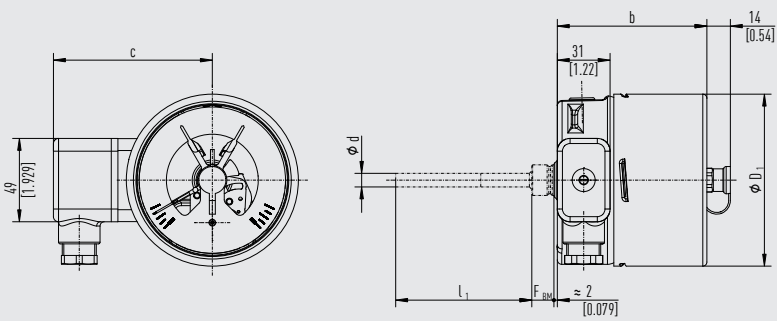

11442522.03

Nominal size	Ø D_1 in mm [in]	Single/Double contact	Triple contact	C
100	101 [3.98]	88 [3.47]	-	94 [3.70]
160	161 [6.34]	90 [3.54]	99 [3.9]	124 [4.88]

Design	F_{BM} 1)	Connection
S	30 [1.18]	G ½ - Male
1	13 [0.51]	Ø 18
2	35 [1.38]	G ½ - Male
3	15 [0.59]	G ½ - Female
4	53 [2.09]	G ½ - Male
5	50 [1.97]	G ½ - Male
7	53 [2.09]	G ½ - Male

1) Additionally + 40 mm [1.57 in] for instruments with end of scale range: >= 300 °C [572 °F], start of scale range: -200 °C [-328 °F]

Lower mount

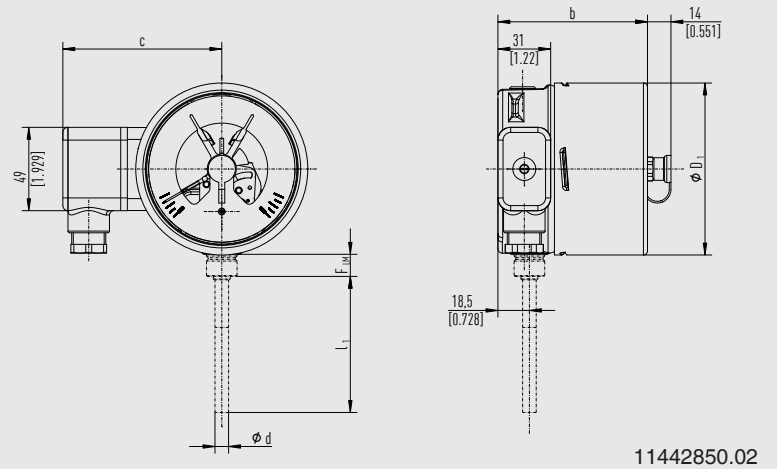

11442850.02

Nominal size	Ø D_1 in mm [in]	Single/Double contact	Triple contact	C
100	101 [3.98]	88 [3.47]	-	94 [3.70]
160	161 [6.34]	90 [3.54]	99 [3.9]	124 [4.88]

Design	F_{LM} 1)	Connection
S	30 [1.18]	G ½ - Male
1	13 [0.51]	Ø 18
2	35 [1.38]	G ½ - Male
3	15 [0.59]	G ½ - Female
4	53 [2.09]	G ½ - Male
5	50 [1.97]	G ½ - Male
7	53 [2.09]	G ½ - Male

1) Additionally 40 mm [1.57 inch] for instruments with: end of scale range: >= 300 °C [572 °F], start of scale range: -200 °C [-328 °F]

Back mount, adjustable stem and dial

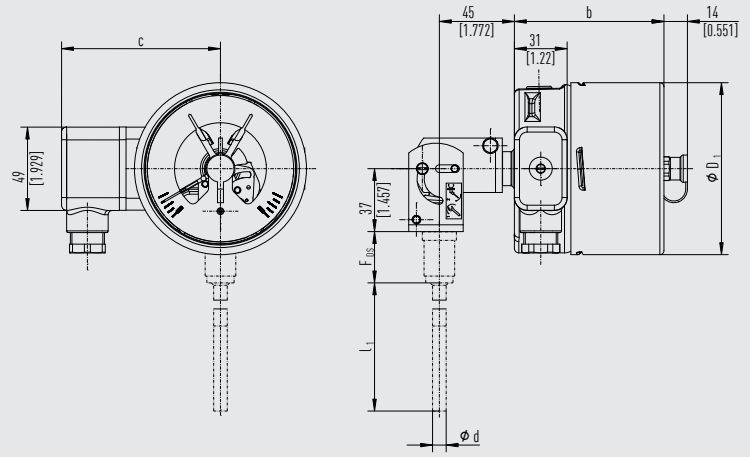

Nominal size	Ø D_1 in mm [in]	Single/Double contact	Triple contact	C
100	101 [3.98]	88 [3.47]	-	94 [3.70]
160	161 [6.34]	90 [3.54]	99 [3.9]	124 [4.88]

Design	F_{DS}	Connection
S	17.5 [0.69]	G ½ - Male
1	28 [1.10]	Ø 18
2	38 [1.50]	G ½ - Male
3	30 [1.18]	G ½ - Female
4	68 [2.68]	G ½ - Male
4.1	68 [2.68]	G ½ - Male
5	55 [2.68]	G ½ - Male
7	68 [2.68]	G ½ - Male

Connection designs for back mount, lower mount and back mount adjustable stem and dial

Design: standard (male threaded connection)

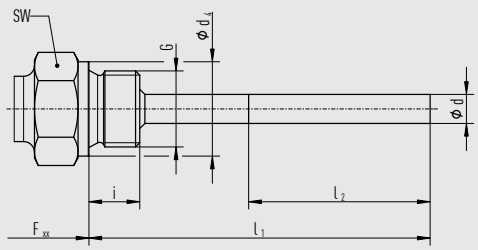

3073050.07

Process connection	Dimensions in mm [in]		
G	i	SW	d_4
G ½ B	14 [0.55]	27 [1.06]	26 [1.02]
G ¾ B	16 [0.63]	32 [1.26]	32 [1.26]
½ NPT	19 [0.75]	22 [0.87]	-
¾ NPT	20 [0.79]	30 [1.18]	-

Standard insertion length l_1 = 63, 100, 160, 200, 250 mm [2.48, 3.94, 6.3, 7.87, 9.84 in]

Design 1, plain stem (without thread)

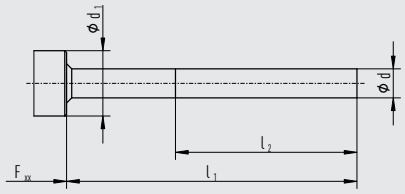

3073050.07

Process connection	Dimensions in mm [in]
Without thread	Ø d1
-	18 [0.7]

Standard insertion length l_1 = 100, 140, 200, 240, 290 mm [3.94, 5.12, 7.87, 9.45, 11.42 in]

Basis for design 4, compression fitting

Design 2, male nut

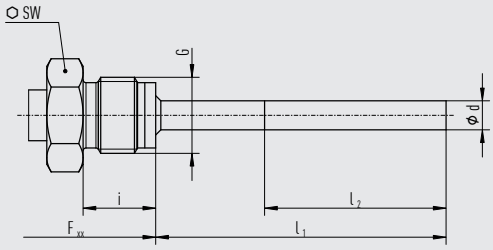

3073050.07

Process connection	Dimensions in mm [in]	
G	i	SW
G ½ B	20 [0.79]	27 [1.06]
M18 x 1.5	15 [0.59]	22 [0.89]

Standard insertion length l_1 = 80, 140, 180, 230 mm [3.15, 5.12, 7.09, 9.06 in]

Design 3, union nut

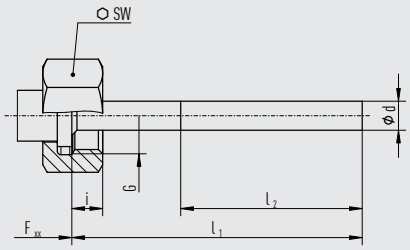

3073050.07

Process connection	Dimensions in mm [in]	
G	i	SW
G ½ B	14 [0.55]	27 [1.06]
G ¾ B	16 [0.63]	32 [1.26]
M24 x 1.5	13.5 [0.53]	32 [1.26]

Standard insertion length l_1 = 89, 126, 186, 226, 276 mm [3.50, 4.96, 7.32, 8.9, 10.87 in]

Design 4, compression fitting sliding on stem

3073050.07

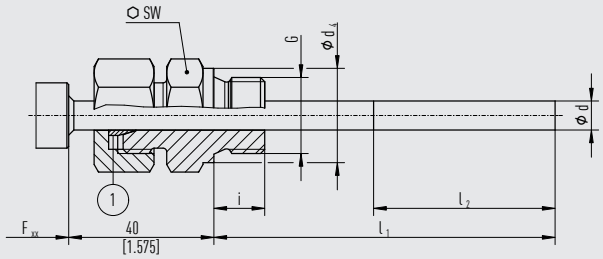

① Sealing ring

Process connection	Dimensions in mm [in]		
G	i	SW	Ø d_4
G ½ B	14 [0.55]	27 [1.06]	26 [1.02]
G ¾ B	16 [0.63]	32 [1.26]	32 [1.26]
M18 x 1.5	12 [0.47]	24 [0.95]	23 [0.91]
½ NPT	19 [0.75]	22 [0.87]	-
¾ NPT	20 [0.79]	30 [1.18]	-

Insertion length l_1 = variable

Design 4.1, compression fitting with support tube sliding on stem

3073050.07

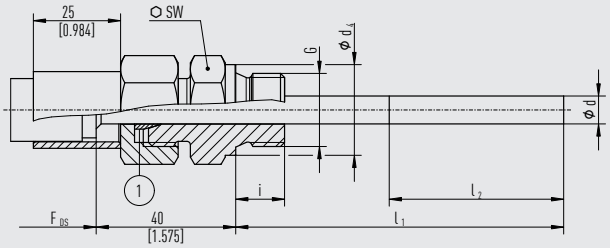

① Sealing ring

Process connection	Dimensions in mm [in]		
G	i	SW	Ø d_4
G ½ B	14 [0.55]	27 [1.06]	26 [1.02]
G ¾ B	16 [0.63]	32 [1.26]	32 [1.26]
M18 x 1.5	12 [0.47]	24 [0.95]	23 [0.91]
½ NPT	19 [0.75]	22 [0.87]	-
¾ NPT	20 [0.79]	30 [1.18]	-

Insertion length l_1 = variable

Design 5, union nut and loose threaded connection

3073050.07

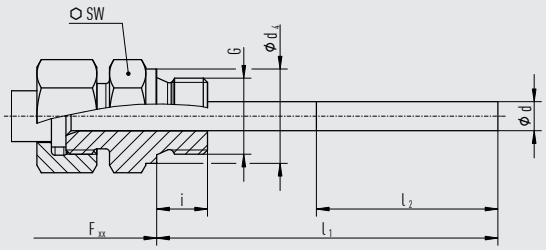

Process connection	Dimensions in mm [in]		
G	i	SW	d_4
G ½ B	14 [0.55]	27 [1.06]	26 [1.02]
G ¾ B	16 [0.63]	32 [1.26]	32 [1.26]
M18 x 1.5	12 [0.47]	24 [0.95]	23 [0.91]
½ NPT	19 [0.75]	22 [0.87]	-
¾ NPT	20 [0.79]	30 [1.18]	-

Insertion length l_1 = variable

Design 7, compression fitting on the case

14042662.02

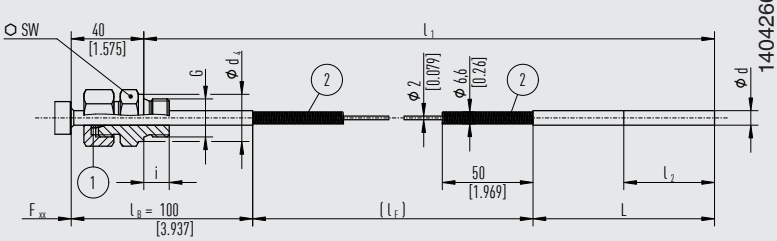

① Sealing ring
② Bend protection

Process connection	Dimensions in mm [in]		
G	i	SW	d_4
G ½ B	14 [0.55]	27 [1.06]	26 [1.02]
G ¾ B	16 [0.63]	32 [1.26]	32 [1.26]
M18 x 1.5	12 [0.47]	24 [0.95]	23 [0.91]
½ NPT	19 [0.75]	22 [0.87]	-
¾ NPT	20 [0.79]	30 [1.18]	-

Insertion length l_1 = ≥ 400 mm [15.75 in]
Probe length L = 200 mm [7.87 in] with Ø d = 6 mm
170 mm [6.69 in] with Ø d = 8 mm
100 mm [3.94 in] with Ø d = ≥ 10 mm
l_B = 100 mm [3.94 in], others on request

Back mount, lower mount and back mount adjustable stem and dial connection designs with contact bulb

Back mount with contact bulb

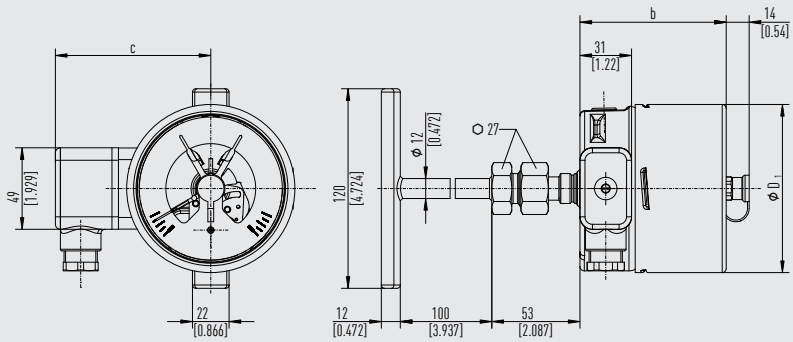

11443723.02

Nominal size	Ø D_1 in mm [in]	Single/Double contact	Triple contact	C
100	101 [3.98]	88 [3.47]	-	94 [3.70]
160	161 [6.34]	90 [3.54]	99 [3.9]	124 [4.88]

Lower mount with contact bulb

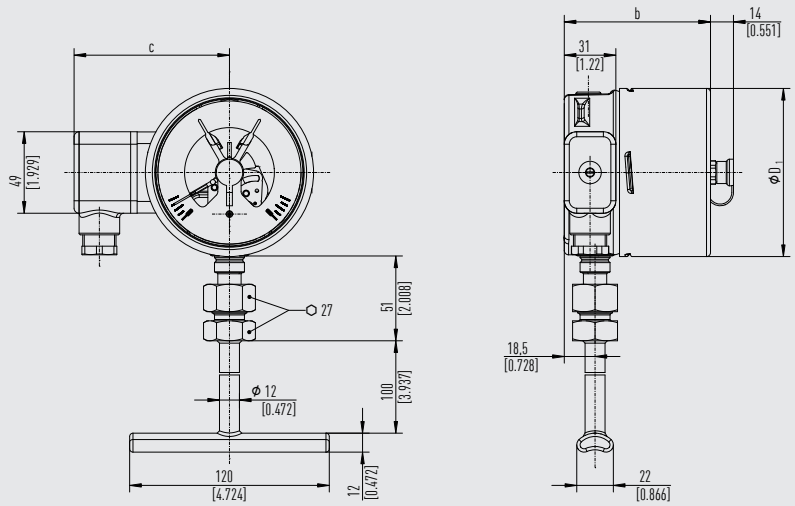

11443723.02

Nominal size	Ø D_1 in mm [in]	Single/Double contact	Triple contact	C
100	101 [3.98]	88 [3.47]	-	94 [3.70]
160	161 [6.34]	90 [3.54]	99 [3.9]	124 [4.88]

Adjustable stem and dial with contact bulb

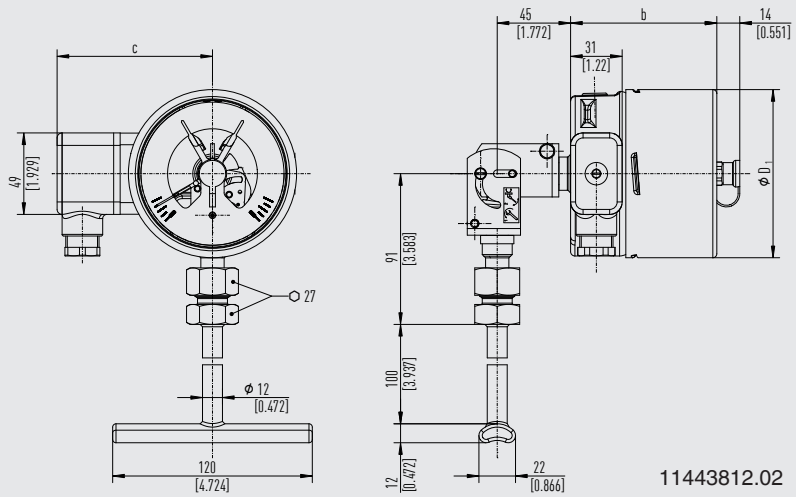

Nominal size	Ø D_1 in mm [in]	Single/Double contact	Triple contact	C
100	101 [3.98]	88 [3.47]	-	94 [3.70]
160	161 [6.34]	90 [3.54]	99 [3.9]	124 [4.88]

Capillary instruments with case mounting options

Capillary instrument, lower mount with instrument mounting bracket

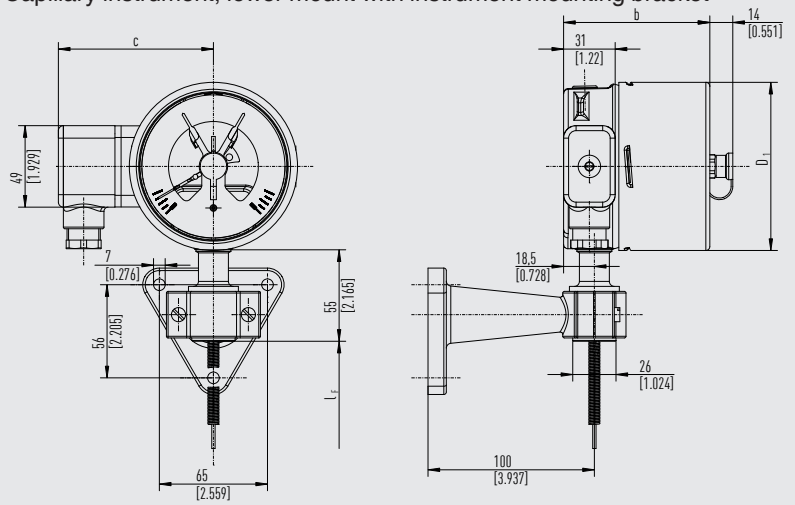

Nominal size	Ø D_1 in mm [in]	Single/Double contact	Triple contact	C
100	101 [3.98]	88 [3.47]	-	94 [3.70]
160	161 [6.34]	90 [3.54]	99 [3.9]	124 [4.88]

Capillary instrument, back mount with panel mounting flange

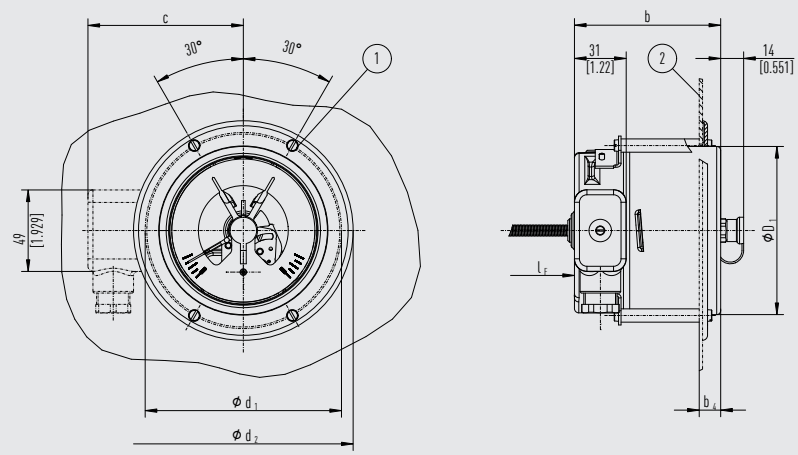

① Screw
② Control panel

11444274.02

Nominal size	Ø D_1 in mm [in]	Ø d_1 in mm [in]	Ø d_2 in mm [in]	Single/Double contact	Triple contact	b_4	C	1
100	101 [3.98]	116 [4.57]	132 [5.2]	88 [3.47]	-	13 [0.51]	94 [3.70]	4 x M4
160	161 [6.34]	178 [7.01]	196 [7.72]	90 [3.54]	99 [3.9]	8.5 [0.34]	124 [4.88]	4 x M5

Capillary instrument, lower mount, with surface mounting flange

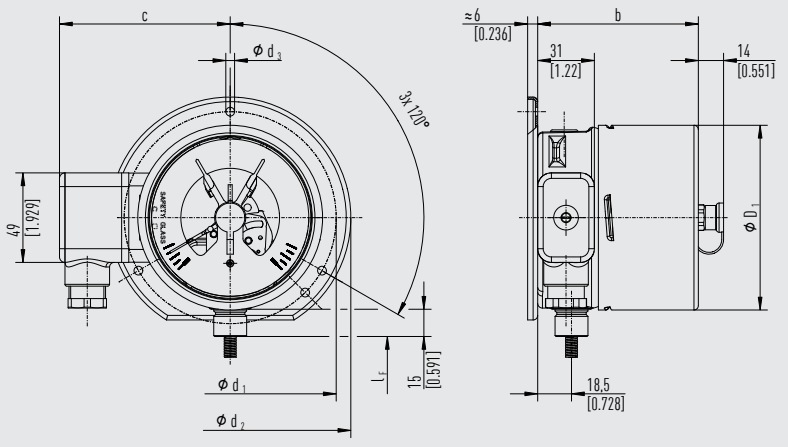

Nominal size	Ø D_1 in mm [in]	Ø d_1 in mm [in]	Ø d_2 in mm [in]	Ø d_3 in mm [in]	Single/Double contact	Triple contact	b_4	C
100	101 [3.98]	116 [4.57]	132 [5.2]	4.8 [0.19]	88 [3.47]	-	13 [0.51]	94 [3.70]
160	161 [6.34]	178 [7.01]	196 [7.72]	6 [0.24]	90 [3.54]	99 [3.9]	8.5 [0.34]	124 [4.88]

Connection designs for capillary instruments

Design 1, plain stem (without thread)

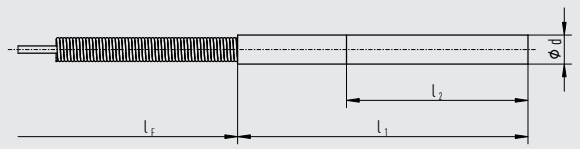

Design 2, male nut

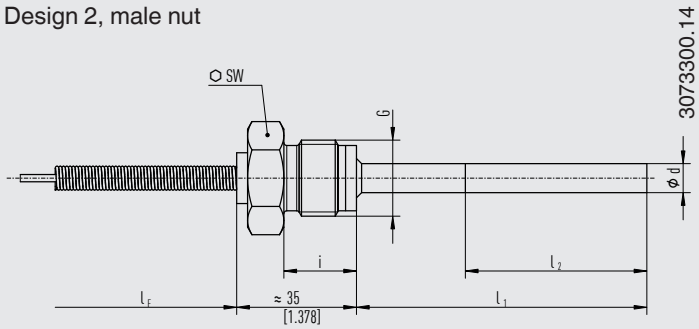

Process connection		Dimensions in mm [in]
G	**i**	**SW**
G ½ B	20 [0.787]	27 [1.06]
M8 x 1.5	15 [0.59]	22 [0.87]

Design 3, union nut

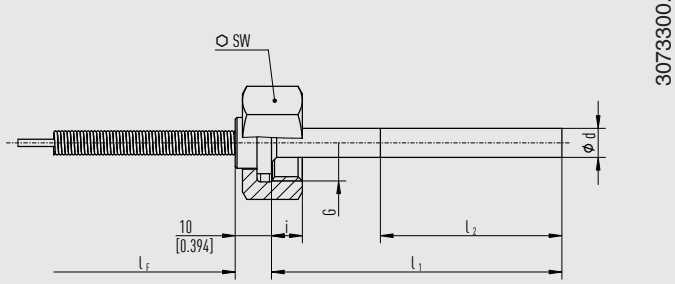

Process connection		Dimensions in mm [in]
G	**i**	**SW**
G ½ B	14 [0.55]	27 [1.06]
G ¾ B	16 [0.63]	32 [1.26]
M24 x 1.5	13.5 [0.53]	24 [1.26]

Design 4, compression fitting sliding on stem

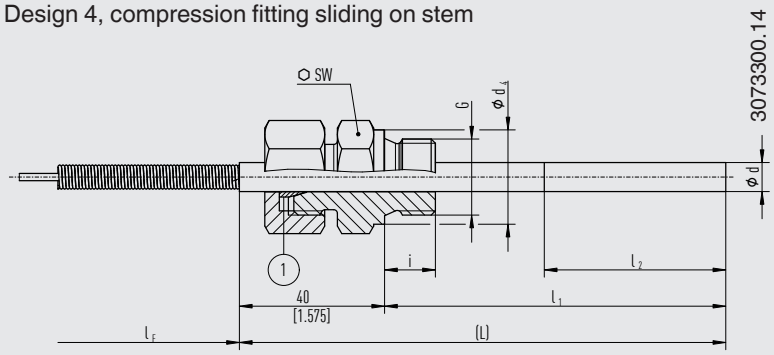

① Sealing ring

Process connection		Dimensions in mm [in]	
G	**i**	**SW**	**d_4**
G ½ B	14 [0.55]	27 [1.06]	26 [1.02]
G ¾ B	16 [0.63]	32 [1.26]	32 [1.26]
M18 x 1.5	12 [0.47]	24 [0.95]	23 [0.91]
½ NPT	19 [0.75]	22 [0.87]	-
¾ NPT	20 [0.79]	30 [1.18]	-

Design 5, union nut and loose threaded connection

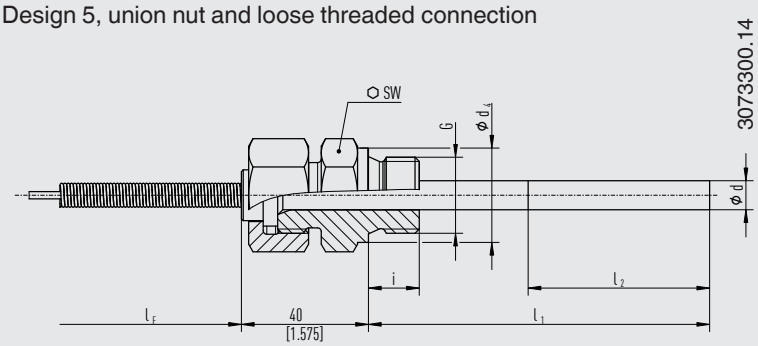

Process connection		Dimensions in mm [in]	
G	**i**	**SW**	**Ø d_4**
G ½ B	14 [0.55]	27 [1.06]	26 [1.02]
G ¾ B	16 [0.63]	32 [1.26]	32 [1.26]
M18 x 1.5	12 [0.47]	24 [0.95]	23 [0.91]
½ NPT	19 [0.75]	22 [0.87]	-
¾ NPT	20 [0.79]	30 [1.18]	-

Design 6.1, compression fitting sliding on capillary (compression fitting is leak-proof)

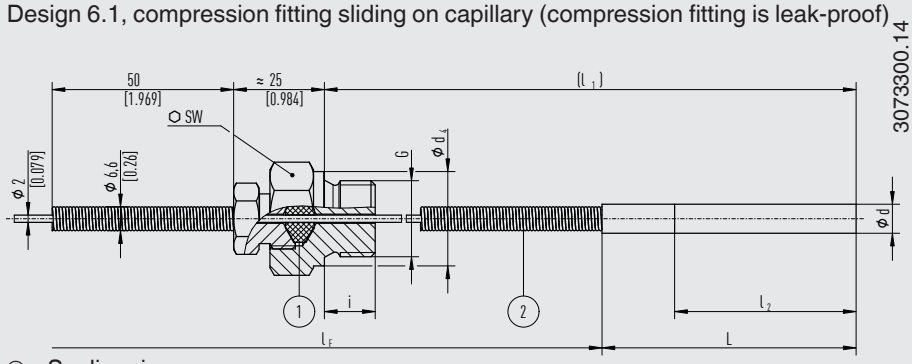

① Sealing ring
② Bend protection spring

Process connection		Dimensions in mm [in]	
G	**i**	**SW**	**Ø d_4**
G ½ B	14 [0.55]	27 [1.06]	26 [1.02]
G ¾ B	16 [0.63]	32 [1.26]	32 [1.26]
½ NPT	19 [0.75]	22 [0.87]	-
¾ NPT	20 [0.79]	30 [1.18]	-

Insertion length l_1 = Variable
Probe length L = 200 mm [7.87 in] with Ø d = 6 mm [0.24 in]
170 mm [6.69 in] with Ø d = 8 mm [0.32 in]
100 mm [3.94 in] with Ø d = ≥ 10 mm [0.39 in]

Design 6.2, compression fitting sliding on capillary with spiral protective sleeve (compression fitting is leak-proof)

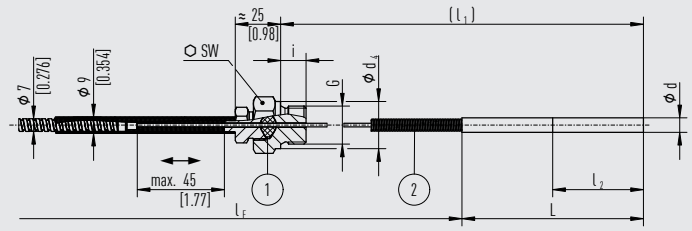

① Sealing ring
② Bend protection spring

Process connection		Dimensions in mm [in]	
G	**i**	**SW**	**d_4**
G ½ B	14 [0.55]	27 [1.06]	26 [1.02]
G ¾ B	16 [0.60]	32 [1.26]	32 [1.26]
½ NPT	19 [0.75]	22 [0.87]	-
¾ NPT	20 [0.79]	30 [1.18]	-

Insertion length l_1 = ≥ 300 mm [11.81 in] with Ø d = 6 mm [0.24 in] or 8 mm [0.32 in]
≥ 200 mm [7.87 in] with Ø d = ≥ 10 mm [0.39 in]
Probe length L = 200 mm [7.87 in] with Ø d = 6 mm [0.24 in]
170 mm [6.69 in] with Ø d = 8 mm [0.32 in]
100 mm [3.94 in] with Ø d = ≥ 10 mm [0.39 in]

Design 6.3, compression fitting sliding on spiral protective sleeve
(compression fitting is not leak-proof)

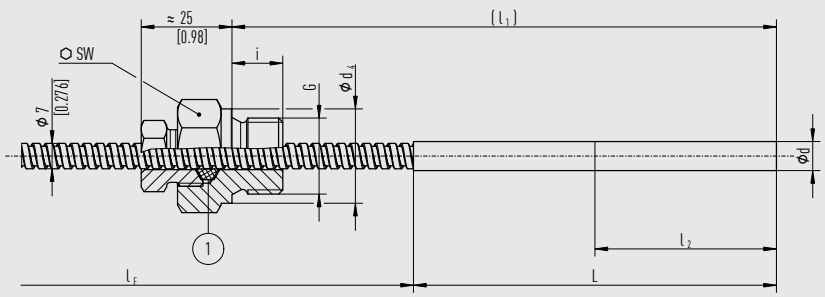

① Ferrule

Process connection		Dimensions in mm [in]	
G	**i**	**SW**	**d_4**
G ½ B	14 [0.55]	27 [1.06]	26 [1.02]
G ¾ B	16 [0.63]	32 [1.26]	32 [1.26]
½ NPT	19 [0.75]	22 [0.87]	-
¾ NPT	20 [0.79]	30 [1.18]	-

Insertion length l_1 = Variable
Probe length L = 200 mm [7.87 in] with Ø d = 6 mm [0.24 in]
170 mm [6.69 in] with Ø d = 8 mm [0.39 in]
100 mm [3.94 in] with Ø d = ≥ 10 mm [0.39 in]

Note for designs 6.1, 6.2, 6.3:
- With some combinations, the active length l2 can correspond to the probe length L.
- If an additional compression fitting is desired, the probe length L increases by at least 60 mm [2.36 in].

Design: contact bulb

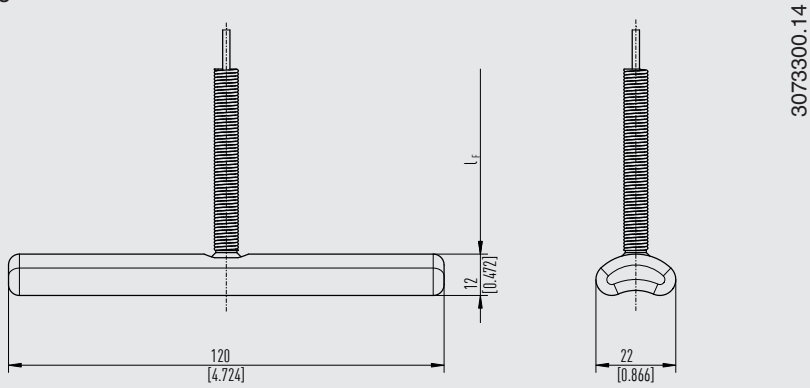

Cable socket

Contact models: 831 and 830 E

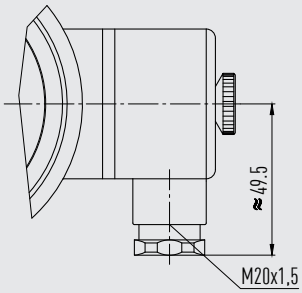

Only use cables with a diameter of 7 ... 13 mm [0.28 ... 0.51 in]

14336089.01

Ordering information

Model / Nominal size / Scale range / Design of connection / Process connection / Type of contact and switching function / Length l_1 / Capillary length l_F / Options

© 02/2009 WIKA Alexander Wiegand SE & Co. KG, all rights reserved.
The specifications given in this document represent the state of engineering at the time of publishing.
We reserve the right to make modifications to the specifications and materials.

WIKA Alexander Wiegand SE & Co. KG
Alexander-Wiegand-Straße 30
63911 Klingenberg/Germany
Tel. +49 9372 132-0
info@wika.de
www.wika.com