Miniature resistance thermometer
For sanitary applications, with integrated sterile connection
Model TR21-C

for further approvals
see page 6

Configurator

Standard articles

Applications

- Sanitary applications
- Food and beverage industry
- Pharmaceutical industry, production of active ingredients
- Biotechnology and life science engineering
- Creamery, brewery

Special features

- Compact design for space-saving mounting
- Simple and fast electrical connection using an M12 x 1 plug connection
- With direct sensor output (Pt100/Pt1000 in 3 or 4-wire version) or integrated transmitter with 4 ... 20 mA output signal, individually parameterisable with free-of-charge WIKAsoft-TT PC configuration software
- Materials and surface finish quality in accordance with standards of hygienic designs

Fig. left: Without neck tube, with clamp connection
Fig. right: Tapered design, G 1/2

Description

The model TR21-C resistance thermometer provides temperature measurement in sanitary applications and can be used for the measurement of liquid and gaseous media in the range of -30 ... +250 °C [-22 ... +482 °F]. For use in hazardous areas, intrinsically safe versions are available.

These thermometers are fitted with process connections that meet the stringent requirements, in terms of materials and design, of hygienic measuring points. All electrical components are protected against moisture (IP67 or IP69K).

The resistance thermometer is available with direct sensor output or integrated transmitter, which can be configured individually via the WIKAsoft-TT PC configuration software. Measuring range, dampening, error signalling per NAMUR NE 043 and tag no. can be adjusted.

The welded junction between the protection tube and the flange makes the use of a sealing as additional material in those areas redundant which are in contact with the product. Through the compact design, this resistance thermometer is designed specifically for operation in applications with limited mounting space. Insertion length, process connection, sensor and connection method can each be selected for the respective application within the ordering information. The electrical connection is made via an M12 x 1 circular connector.

For applications requiring the sterilisation of the instrument in autoclaves, an especially temperature-resistant instrument version is available.

Smart in sensing

Data sheets showing similar products:
Protection tube for sanitary applications; model TW22; see data sheet TW 95.22
Resistance thermometer, with flange connection; model TR22-A; see data sheet TE 60.22
Resistance thermometer, for orbital welding; model TR22-B; see data sheet TE 60.23
Miniature resistance thermometer, with flange connection; model TR21-A; see data sheet TE 60.26
Miniature resistance thermometer, for orbital welding; model TR21-B; see data sheet TE 60.27

Specifications

Measuring element		
Type of measuring element		
4 ... 20 mA version (models TR21-C-xTT, TR21-C-xTB)	■ Pt1000 (measuring current < 0.3 mA; self-heating can be ignored) ■ Face-sensitive Pt1000 [1] (measuring current < 0.3 mA; self-heating can be ignored)	
Pt100 (model TR21-C-xPx)/Pt1000 (model TR21-C-xRx) version	■ Pt100 (measuring current: 0.1 ... 1.0 mA) ■ Face-sensitive Pt100 (measuring current 0.1 ... 1.0 mA) [1] ■ Pt1000 (measuring current: 0.1 ... 0.3 mA) ■ Face-sensitive Pt1000 (measuring current 0.1 ... 0.3 mA) [1]	
	→ For detailed specifications for Pt sensors, see Technical information IN 00.17 at www.wika.com.	
Connection method		
4 ... 20 mA version (models TR21-C-xTT, TR21-C-xTB)	2-wire	
Pt100 (model TR21-C-xPx)/Pt1000 (model TR21-C-xRx) version	3-wire	With a cable length of 30 m or longer, measuring deviations can occur
	4-wire	The lead resistance can be ignored
Tolerance value of the measuring element [2] per IEC 60751		
4 ... 20 mA version (models TR21-C-xTT, TR21-C-xTB)	Class A	
Pt100 (model TR21-C-xPx)/Pt1000 (model TR21-C-xRx) version	■ Class AA ■ Class A	

1) Face-sensitive measuring resistors, through their small design they serve to reduce the heat dissipation with short insertion lengths. Available for the temperature range up to 150 °C [302 °F].
For protection tube insertion lengths of less than 50 mm, face-sensitive measuring resistors are recommended.
For protection tube insertion lengths of less than 11 mm, face-sensitive measuring resistors are generally used.
2) Depending on the process connection, the deviation can be greater.

Accuracy specifications	
Measuring deviation of the transmitter per IEC 62828	±0.25 K
Total measuring deviation in accordance with IEC 62828	Measuring deviation of the measuring element + transmitter
Influence of the ambient temperature	0.1 % of span / 10 K T_a
Influence of supply voltage	±0.025 % / V (depending on the supply voltage U_B)
Influence of the load	±0.05 % / 100 Ω
Linearisation	Linear to temperature per IEC 60751
Linearisation error	±0.1 % [1] of the set measuring span
Reference conditions	
Ambient temperature T_a ref	23 °C
Supply voltage U_B ref	DC 12 V

1) ±0.2 % for start of measuring range less than 0 °C [32 °F]

Example calculation: Total measuring deviation
(measuring range 0 ... 150 °C, load 200 Ω, supply voltage 16 V, ambient temperature 33 °C, process temperature 100 °C)

Sensor element (class A per IEC 60751: 0.15+ (0.0020(t))):	±0.350 K
Measuring deviation of the transmitter ±0.25 K:	±0.250 K
Output error ±(0.1 % of 150 K):	±0.150 K
Effect of load ±(0.05 % / 100 Ω of 150 K):	±0.150 K
Influence of supply voltage ±(0.025 % / V of 150 K):	±0.150 K
Influence of the ambient temperature ±(0.1 % / 10 K T_a of 150 K):	±0.150 K

Measuring deviation (typical)
sqrt (0.35 K^2 + 0.25 K^2 + 0.15 K^2 + 0.15 K^2 + 0.15 K^2+ 0.15 K^2)
sqrt (0.275 K^2) = 0.524 K

Measuring deviation (maximum)
0.35 K + 0.25 K + 0.15 K + 0.15 K + 0.15 K + 0.15 K = 1.2 K

Measuring range		
Temperature range		
4 ... 20 mA version (models TR21-C-xTT, TR21-C-xTB)	■ -30 ... +150 °C [-22 ... +302 °F] ■ -30 ... +250 °C [-22 ... +482 °F] 1)	
Pt100 (model TR21-C-xPx)/Pt1000 (model TR21-C-xRx) version	Class AA	0 ... 150 °C [32 ... 302 °F]
	Class A	-30 ... +250 °C [-22 ... +482 °F]
Unit (4 ... 20 mA version)	Configurable °C, °F, K	
Temperature at the connector (Pt100, Pt1000 version)	Max. 85 °C [185 °F]	
Measuring span (4 ... 20 mA version)	Minimum 20 K, maximum 300 K	

1) The temperature transmitter should therefore be protected from temperatures over 85 °C [185 °F].

Process connection	
Type of process connection	■ Clamp ■ VARINLINE® ■ NEUMO BioControl® ■ Union nut DIN 11851 ■ Tapered hygienic threaded connections ■ Ingold connection
Protection tube	
Protection tube design	→ see drawings from page 11
Protection tube diameter	■ 6 mm ■ Protection tube tip stepped down to 4.5 mm (from U_1 > 25 mm)
Surface roughness	■ R_a ≤ 0.76 µm (SF3 per ASME BPE) ■ R_a ≤ 0.38 µm (SF4 per ASME BPE) ■ R_a ≤ 0.38 µm electropolished (SF4 per ASME BPE)
Insertion length U_1 1)	■ 25 mm ■ 50 mm ■ 75 mm ■ 100 mm ■ 150 mm ■ 200 mm
	Other insertion lengths on request
Material (wetted)	Stainless steel 1.4435 (316L, UNS S31603)

1) For the TR21-C design without protection tube, the insertion length is defined by the dimension l1 (see dimensions in mm).
The thickness of bottom of the protection tube can be neglected for dimensioning. It is offset by the spring travel of the measuring insert.

→ For dimensions, see dimension tables from page 11

VARINLINE® is a registered trademark of the company GEA Tuchenhagen (former designation: VARIVENT®).
BioControl® is a registered trademark of the company NEUMO.

Output signal (4 ... 20 mA version)	
Analogue output	4 ... 20 mA, 2-wire
Load R_A	$R_A \leq (U_B - 10\ V) / 23\ mA$ with R_A in Ω and U_B in V
	The permissible load depends on the loop supply voltage. For communication with the instrument with programming unit PU-548, a max. load of 350 Ω is admissible.
Load diagram	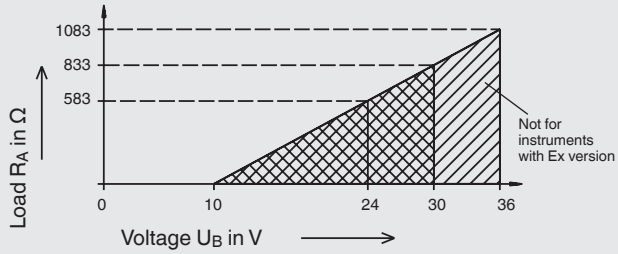
Factory configuration	
Measuring range	Measuring range 0 ... 150 °C [32 ... 302 °F]
	Other measuring ranges are adjustable
Current signals for error signalling	Configurable in accordance with NAMUR NE 043 downscale ≤ 3.6 mA upscale ≥ 21.0 mA
Current value for sensor short-circuit	Not configurable in accordance with NAMUR NE 043 downscale ≤ 3.6 mA
Communication	
Info data	Tag no., description and user message can be stored in transmitter
Configuration and calibration data	Permanently stored
Configuration software	WIKAsoft-TT → Configuration software (multilingual) as a download from www.wika.com
Voltage supply	
Supply voltage U_B	DC 10 ... 30 V
Supply voltage input	Protected against reverse polarity
Permissible residual ripple of supply voltage	10 % generated by U_B < 3 % ripple of the output current
Time response	
Switch-on delay, electrical	Max. 4 s (time before the first measured value)
Warm-up time	After approx. 4 minutes, the instrument will function to the specifications (accuracy) given in the data sheet.
Response time (per IEC 60751)	t_{50} < 3.3 s t_{90} < 9.7 s

Electrical connection	
Connection type	M12 x 1 circular connector (4-pin)
Material	Stainless steel 1.4404

Pin assignment

Output signal 4 ... 20 mA
M12 x 1 circular connector (4-pin)

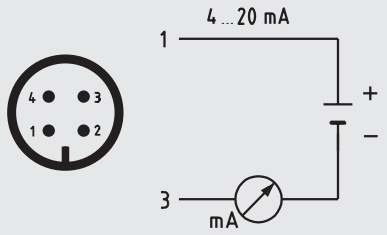

Pin	Signal	Description
1	L+	10 ... 30 V
2	VQ	not connected
3	L-	0 V
4	C	not connected

Output signal Pt100 sensor
M12 x 1 circular connector (4-pin)

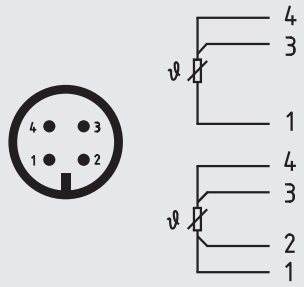

Operating conditions	
Ambient temperature range	
4 ... 20 mA version (models TR21-C-xTT, TR21-C-xTB)	-40 ... +85 °C [-40 ... +185 °F]
Pt100 (model TR21-C-xPx)/Pt1000 (model TR21-C-xRx) version	-50 ... +85 °C [-58 ... +185 °F]
Storage temperature range	-40 ... +85 °C [-40 ... +185 °F]
Climate class per IEC 60654-1	
4 ... 20 mA version (models TR21-C-xTT, TR21-C-xTB)	Cx (-40 ... +85 °C [-40 ... +185 °F], 5 ... 95 % r. h.)
Pt100 (model TR21-C-xPx)/Pt1000 (model TR21-C-xRx) version	Cx (-50 ... +85 °C [-58 ... +185 °F], 5 ... 95 % r. h.)
Maximum permissible humidity, condensation	100 % r. h., condensation allowed
Max. operating pressure	Dependent on particular process connection
Salt fog	IEC 60068-2-11
Shock resistance per IEC 60068-2-27	50 g, 6 ms, 3 axes, 3 directions, three times per direction
Maximum permissible autoclaving conditions	Max. 134 °C, 3 bar abs., 100 % r. h., duration 20 min., max. 50 cycles
	Autoclavable with mounted protective cap at coupler connector
Conditions for outdoor use (only applies to UL approval)	■ The instrument is suitable for applications with pollution degree 3. ■ The power supply must be suitable for operation above 2,000 m should the temperature transmitter be used at this altitude. ■ The instrument shall be installed in locations sheltered from the weather. ■ The instrument shall be installed sun/UV irradiation protected.
Ingress protection (IP code)	
Case with connected connector [1)]	■ IP67 per IEC/EN 60529 ■ IP69 per IEC/EN 60529 ■ IP69K per ISO 20653
	The stated ingress protection only applies when plugged in using line connectors that have the appropriate ingress protection.
Coupler connector, not connected	IP67 per IEC/EN 60529
Weight in kg	approx. 0.3 ... 2.5 (depending on version)

1) Not tested with UL

Approvals

Logo	Description	Country
CE	**EU declaration of conformity**	European Union
	EMC directive [1) 2)] EN 61326 emission (group 1, class B) and immunity (industrial application) Configuration at 20 % of the full measuring range	
	RoHS directive	
c UL us LISTED	**UL - only for instrument version without explosion protection** Safety (e.g. electr. safety, overpressure, ...)	USA and Canada

Optional approvals

Logo	Description	Country
CE Ex	**EU declaration of conformity**	European Union
	ATEX directive Hazardous areas Zone 0 gas — II 1G Ex ia IIC T1 ... T6 Ga Zone 1 mounting to zone 0 gas — II 1/2G Ex ia IIC T1 ... T6 Ga/Gb Zone 1 gas — II 2G Ex ia IIC T1 ... T6 Gb Zone 20 dust — II 1D Ex ia IIIC T135 °C Da Zone 21 mounting to zone 20 dust — II 1/2D Ex ia IIIC T135 °C Da/Db Zone 21 dust — II 2D Ex ia IIIC T135 °C Db	
IEC IECEx	**IECEx - in combination with ATEX** Hazardous areas Zone 0 gas — Ex ia IIC T1 ... T6 Ga Zone 1 mounting to zone 0 gas — Ex ia IIC T1 ... T6 Ga/Gb Zone 1 gas — Ex ia IIC T1 ... T6 Gb Zone 20 dust — Ex ia IIIC T135 °C Da Zone 21 mounting to zone 20 dust — Ex ia IIIC T135 °C Da/Db Zone 21 dust — Ex ia IIIC T135 °C Db	International
c SP us	**CSA**	USA and Canada
	Safety (e.g. electr. safety, overpressure, ...)	
	Hazardous areas Class I, division 1 or 2, groups A, B, C, D T1 ... T6 Class I, zone 0 or 1, IIC Ex/AEx ia IIC T1 ... T6 Ga Class II / III, division 1 or 2, groups E, F, G T1 ... T6 / 135 °C Class II / III, zone 20 or 21, Ex/AEx ia IIIC T135 °C Da	
EAC	**EAC**	Eurasian Economic Community
	EMC directive [1)]	
EAC Ex	Hazardous areas Zone 0 gas — 0Ex ia IIC T6 ... T1 Ga X Zone 1 gas — 1Ex ia IIC T6 ... T1 Gb X Zone 1 gas — Ex ia IIIC T135 °C Gb X Zone 1 mounting to zone 0 gas — Ex ia IIC T6 ... T1 Ga/Gb X Zone 20 dust — Ex ia IIIC T135 °C Da X Zone 20 dust — Ex ia IIIC T80 ... T440 Da X Zone 21 dust — Ex ia IIIC T80 ... T440 Db X	

Logo	Description	Country
	Ex Ukraine Hazardous areas Zone 0 gas — II 1G Ex ia IIC T6 ... T1 Ga Zone 20 dust — II 1D Ex ia IIIC T135 °C Da Zone 1 mounting to zone 0 gas — II 1/2G Ex ia IIC T6 ... T1 Ga/Gb Zone 21 mounting to zone 20 dust — II 1/2D Ex ia IIIC T135 °C Da/Db Zone 1 gas — II 2G Ex ia IIC T6 ... T1 Gb Zone 21 dust — II 2D Ex ia IIIC T135 °C Db Zone 1 gas — II 2G Ex ib IIC T6 ... T1 Gb Zone 21 dust — II 2D Ex ib IIIC T135 °C Db Zone 1 mounting to zone 0 gas — II 1/2G Ex ib IIC T6 ... T1 Ga/Gb Zone 21 mounting to zone 20 dust — II 1/2D Ex ib IIIC T135 °C Da/Db	Ukraine
	CCC [3] Hazardous areas Zone 0 gas — Ex ia IIC T1~T6 Ga Zone 1 gas — Ex ia IIC T1~T6 Gb Zone 1 mounting to zone 0 gas — Ex ia IIC T1~T6 Ga/Gb Zone 20 dust — Ex iaD 20 T135 Zone 21 dust — Ex iaD 21 T135 Zone 21 mounting to zone 20 dust — Ex iaD 20/21 T135	China
	GOST Metrology, measurement technology	Russia
	KazInMetr Metrology, measurement technology	Kazakhstan
-	**MTSCHS** Permission for commissioning	Kazakhstan
	BelGIM Metrology, measurement technology	**Belarus**
	Uzstandard Metrology, measurement technology	**Uzbekistan**
	3-A [4] Sanitary Standard	**USA**
	EHEDG [4] Hygienic Equipment Design	**European Union**

1) Only for built-in transmitter
2) During transient interferences (e.g. burst, surge, ESD) take into account an increased measuring deviation of up to 2 %.
3) Not for built-in transmitter
4) Confirmation of 3-A or EHEDG conformity only valid with separately selectable 2.2 test report

Instruments marked with “ia” may also be used in areas only requiring instruments marked with “ib” or “ic”.
If an instrument with “ia” marking has been used in an area with requirements in accordance with “ib” or “ic”, it can no longer be operated in areas with requirements in accordance with “ia” afterwards.

Certificates (option)

Certificates		
Certificates	■ 2.2 test report ■ 3.1 inspection certificate ■ DKD/DAkkS calibration certificate ■ Manufacturer's declaration regarding regulation (EC) 1935/2004 and (EC) 2023/2006 ■ Certificate of the surface roughness of wetted parts	
Hygienic certificates	3-A approval	EHEDG approval
Clamp	Yes	Yes [2)]
VARINLINE®	Yes	Yes
NEUMO BioControl®	Yes	No
Union nut DIN 11851	Yes [1)]	Yes [2)]
Tapered hygienic threaded connections	No	No
Ingold connection	No	No

1) In combination with
- ASEPTO-STAR k-flex upgrade gaskets from Kieselmann GmbH, Germany or
- SKS gasket set DIN 11851 EHEDG from Siersema Komponenten Service (S.K.S.) B.V., Netherlands

2) In combination with
T-ring seals from Combifit International B. V., Netherlands

The minimum length (metal part of the probe or the length of the probe below the process connection) for carrying out a measurement accuracy test 3.1 or DKD/DAkkS is 100 mm. Calibration of shorter lengths on request.

Approvals and certificates, see website

Safety-relevant characteristic values for explosion-protected version (option)

Thermometer with transmitter and 4 ... 20 mA output signal (models TR21-C-xTT, TR21-C-xTB)

Marking:

Hazardous gas atmosphere	Temperature class	Ambient temperature range (T_a)	Maximum surface temperature (T_{max}) at the tip of the probe or protection tube
II 1G Ex ia IIC T1 - T6 Ga **II 1/2G Ex ia IIC T1 - T6 Ga/Gb** **II 2G Ex ia IIC T1 - T6 Gb**	T6	-40 ... +45 °C	T_M (medium temperature) + self-heating (15 K) Pay attention to the special conditions for safe use.
	T5	-40 ... +60 °C	
	T4	-40 ... +85 °C	
	T3	-40 ... +85 °C	
	T2	-40 ... +85 °C	
	T1	-40 ... +85 °C	

Hazardous dust atmosphere	Power P_i	Ambient temperature range (T_a)	Maximum surface temperature (T_{max}) at the tip of the probe or protection tube
II 1D Ex ia IIIC T135 °C Da **II 1/2D Ex ia IIIC T135 °C Da/Db** **II 2D Ex ia IIIC T135 °C Db**	750 mW	-40 ... +40 °C	T_M (medium temperature) + self-heating (15 K) Pay attention to the special conditions for safe use.
	650 mW	-40 ... +70 °C	
	550 mW	-40 ... +85 °C	

Safety-related maximum values for the current loop circuit (+ and - connections):

Parameters	Hazardous gas atmosphere	Hazardous dust atmosphere
Terminals	+ / -	+ / -
Voltage U_i	DC 30 V	DC 30 V
Current I_i	120 mA	120 mA
Power P_i	800 mW	750/650/550 mW
Effective internal capacitance C_i	29.7 nF	29.7 nF
Effective internal inductance L_i	Negligible	Negligible
Maximum self-heating at the probe or protection tube tip	15 K	15 K

Thermometer with direct sensor output with Pt100 (model TR21-C-xPx) or Pt1000 (model TR21-C-xRx)

Marking:

Marking	Temperature class	Ambient temperature range (T_a)	Maximum surface temperature (T_{max}) at the tip of the probe or protection tube
II 1G Ex ia IIC T1 - T6 Ga **II 1/2G Ex ia IIC T1 - T6 Ga/Gb** **II 2G Ex ia IIC T1 - T6 Gb**	T6	-50 ... +80 °C	T_M (medium temperature) + self-heating Pay attention to the special conditions for safe use.
	T5	-50 ... +85 °C	
	T4	-50 ... +85 °C	
	T3	-50 ... +85 °C	
	T2	-50 ... +85 °C	
	T1	-50 ... +85 °C	

Marking	Power P_i	Ambient temperature range (T_a)	Maximum surface temperature (T_{max}) at the tip of the probe or protection tube
II 1D Ex ia IIIC T135 °C Da **II 1/2D Ex ia IIIC T135 °C Da/Db** **II 2D Ex ia IIIC T135 °C Db**	750 mW	-50 ... +40 °C	T_M (medium temperature) + self-heating Pay attention to the special conditions for safe use.
	650 mW	-50 ... +70 °C	
	550 mW	-50 ... +85 °C	

Safety-related maximum values for the current loop circuit (connections in accordance with pin assignment 1 - 4):

Parameters	Gas applications	Dust applications
Terminals	1 - 4	1 - 4
Voltage U_i	DC 30 V	DC 30 V
Current I_i	550 mA	250 mA
Power P_i	1,500 mW	750/650/550 mW
Effective internal capacitance C_i	Negligible	Negligible
Effective internal inductance L_i	Negligible	Negligible
Maximum self-heating at the probe or protection tube tip	(R_{th}) = 335 K/W	(R_{th}) = 335 K/W

Overview of the process connections

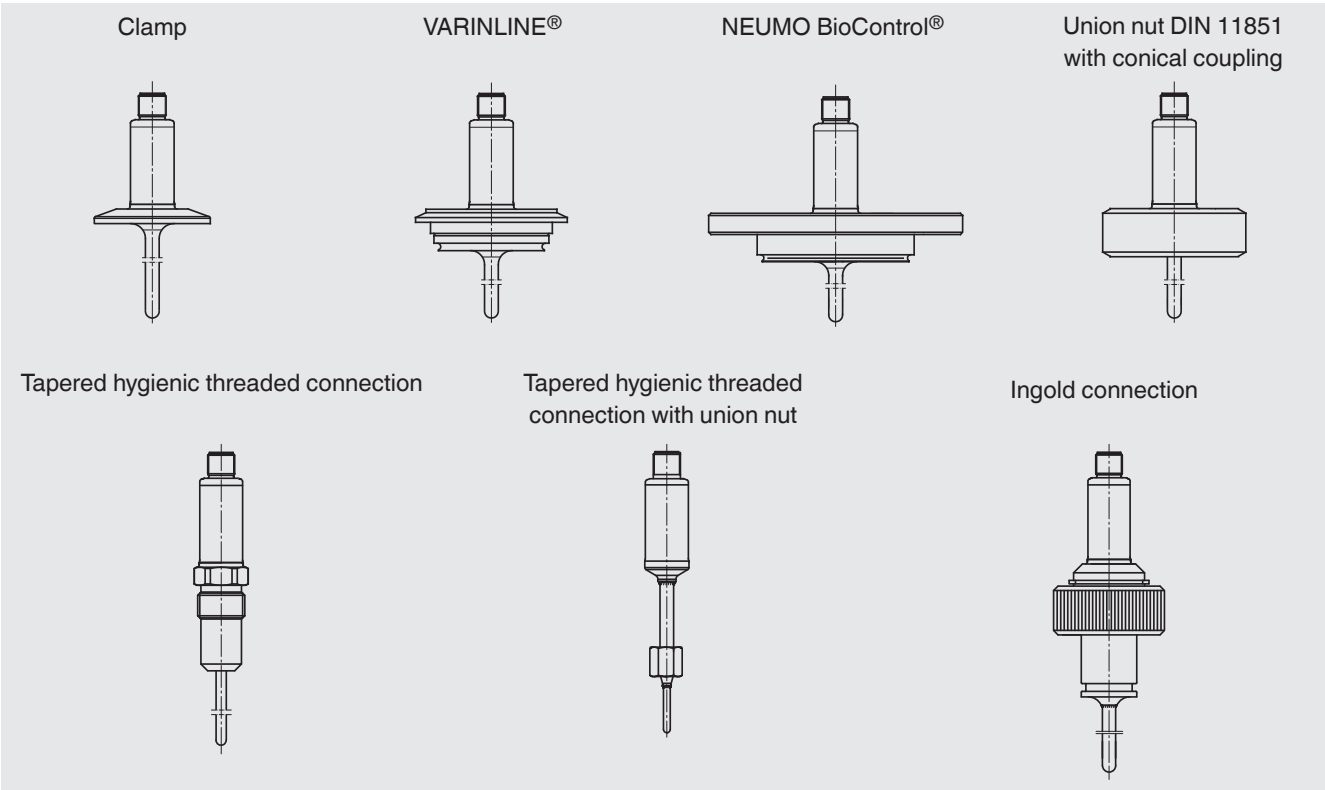

VARINLINE® is a registered trademark of the company GEA Tuchenhagen (former designation: VARIVENT®).
BioControl® is a registered trademark of the company NEUMO.

Dimensions of the process connections in mm

Clamp process connection

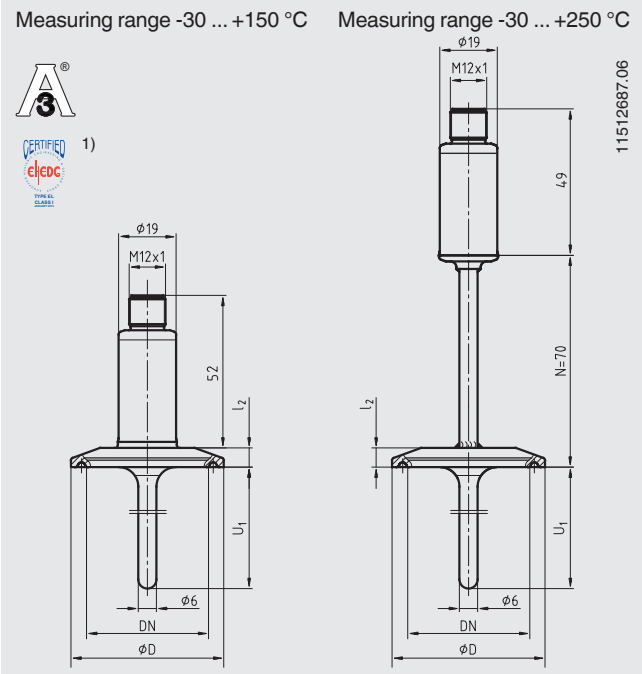

VARINLINE® process connection

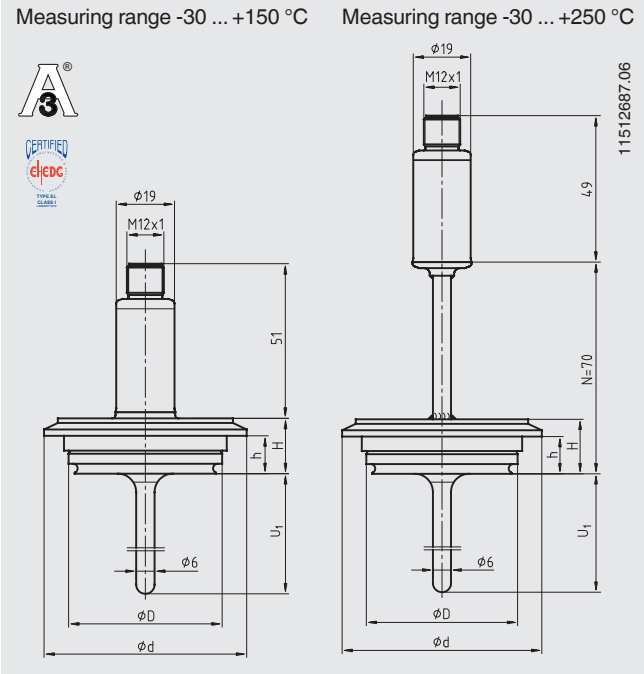

1) In combination with
T-ring seals from Combifit International B. V., Netherlands

Dimensions for clamp process connection

Process connection	Nominal width in mm/inch	PN in bar	Dimensions in mm		Weight in kg
			Ø D	l_2	
DIN 32676 for pipes per DIN 11866 row A [1]	DN 10 ... 20	25	34.0	6.35	0.2
	DN 25 ... 40	25	50.5	6.35	0.3
	DN 50	16	64.0	6.35	0.4
DIN 32676 for pipes per DIN 11866 row B	13.5 ... 17.2	25	25.0	4.75	0.2
	21.3 ... 33.7	25	50.5	6.35	0.3
	42.4 ... 48.3	16	64.0	6.35	0.3
DIN 32676 for pipes per DIN 11866 row C	½" ... ¾"	25	25.0	4.75	0.2
	1" ... 1 ½"	25	50.5	6.35	0.3
	2"	16	64.0	6.35	0.4
TRI-CLAMP®	½" ... ¾"	13.8	25.0	4.75	0.2
	1" ... 1 ½"	13.8	50.5	6.35	0.3
	2"	13.8	64.0	6.35	0.4
	2 ½"	13.8	77.5	6.35	0.5
	3"	13.8	91.0	6.35	0.6
	4"	13.8	119.0	6.35	0.8

1) Process connection identical in construction to ISO 2852

Dimensions for VARINLINE® process connection

Process connection	Nominal width in mm	PN in bar	Dimensions in mm				Weight in kg
			Ø D	Ø d	H	h	
Form B	DN 10, DN 15	25	31	52.7	20	13.65	0.3
Form F	DN 25, DN 32	25	50	66.0	18	12.30	0.4
Form N	DN 40, DN 50	25	68	84.0	18	12.30	0.6

TRI-CLAMP® is a trademark of the company Alfa Laval AB SE.
VARINLINE® is a registered trademark of the company GEA Tuchenhagen (former designation: VARIVENT®).

NEUMO BioControl® process connection

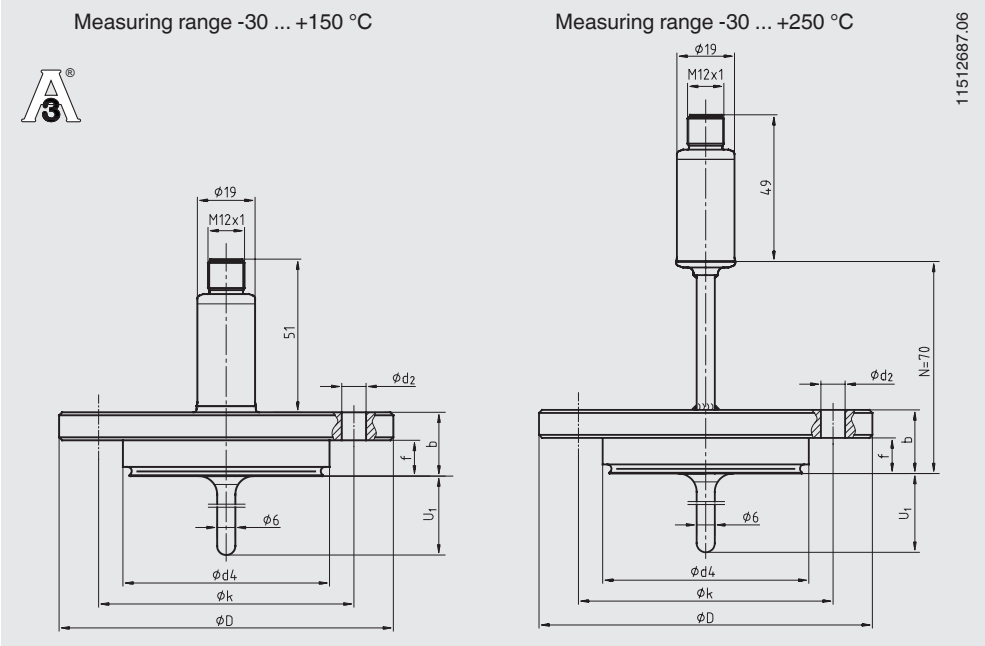

BioControl® is a registered trademark of the company NEUMO.

For a detailed description of the BioControl® cases, see data sheet AC 09.14.

Case size	Nominal width in mm	PN in bar	Dimensions in mm							Weight in kg
			U_1 2)	Ø d_4	Ø D	f	b	Ø k	Ø d_2	
Size 25	DN 8	16	5	30.5	64	11	20	50	4 x Ø 7	0.4
	DN 10	16	6	30.5	64	11	20	50	4 x Ø 7	0.4
	DN 15	16	9	30.5	64	11	20	50	4 x Ø 7	0.4
	DN 20	16	11	30.5	64	11	20	50	4 x Ø 7	0.4
Size 50	DN 25	16	15	50.0	90	17	27	70	4 x Ø 9	0.8
	DN 40	16	20	50.0	90	17	27	70	4 x Ø 9	0.8
	DN 50	16	25	50.0	90	17	27	70	4 x Ø 9	0.8
	DN 65	16	35	50.0	90	17	27	70	4 x Ø 9	0.8
	DN 80	16	45	50.0	90	17	27	70	4 x Ø 9	0.8
	DN 100	16	55	50.0	90	17	27	70	4 x Ø 9	0.8
Size 65	DN 40	16	20	68.0	120	17	27	95	4 x Ø 11	1.4
	DN 50	16	25	68.0	120	17	27	95	4 x Ø 11	1.4
	DN 65	16	35	68.0	120	17	27	95	4 x Ø 11	1.4
	DN 80	16	45	68.0	120	17	27	95	4 x Ø 11	1.4
	DN 100	16	55	68.0	120	17	27	95	4 x Ø 11	1.4

2) Recommended insertion length for installation in BioControl® flow-through housing; other insertion lengths are possible.

Union nut process connection DIN 11851 with conical coupling (milk thread fitting)

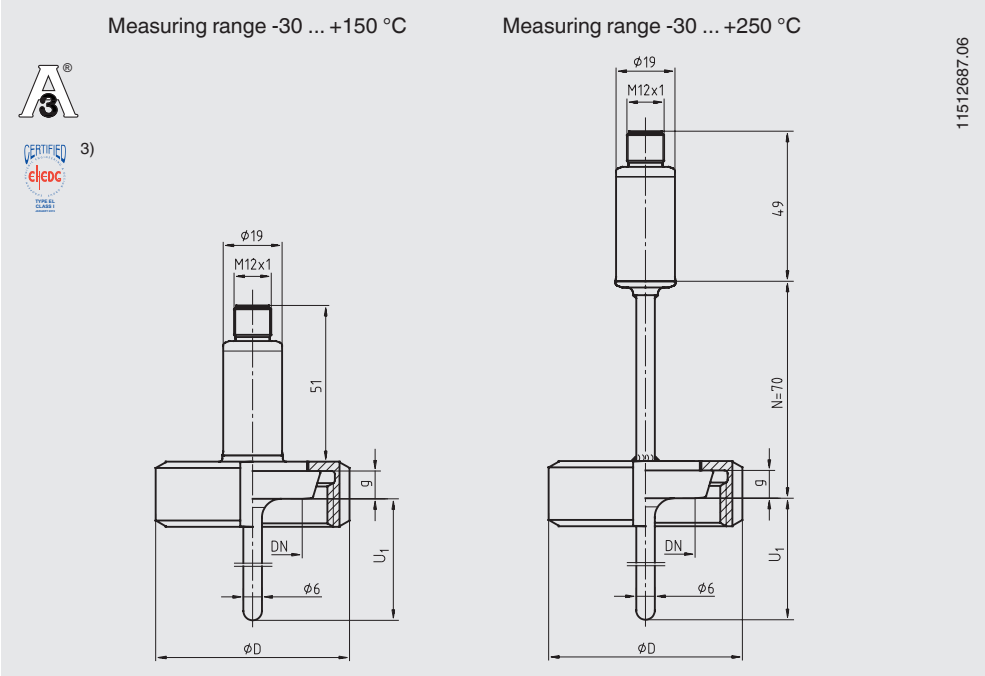

3) In combination with
- ASEPTO-STAR k-flex upgrade gaskets from Kieselmann GmbH, Germany or
- SKS gasket set DIN 11851 EHEDG from Siersema Komponenten

Nominal width in mm	PN in bar	Dimensions in mm				Weight in kg
		Ø d_6	G	Ø D	g	
DN 20	40	36.5	RD 44 x 1/6	54	8	0.4
DN 25	40	44.0	RD 52 x 1/6	63	10	0.5
DN 32	40	50.0	RD 58 x 1/6	70	10	0.6
DN 40	40	56.0	RD 65 x 1/6	78	10	0.8
DN 50	25	68.5	RD 78 x 1/6	92	11	0.9

Process connection, tapered hygienic threaded connections

■ Process connection G ½

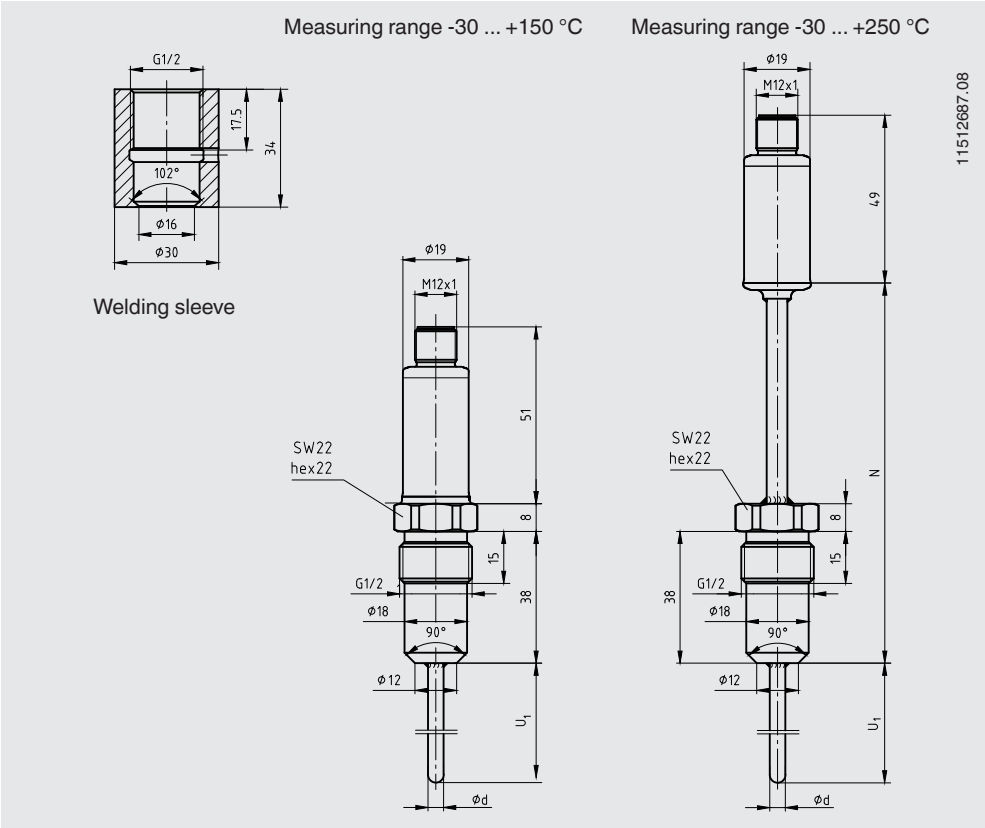

■ Process connection M12 x 1.5

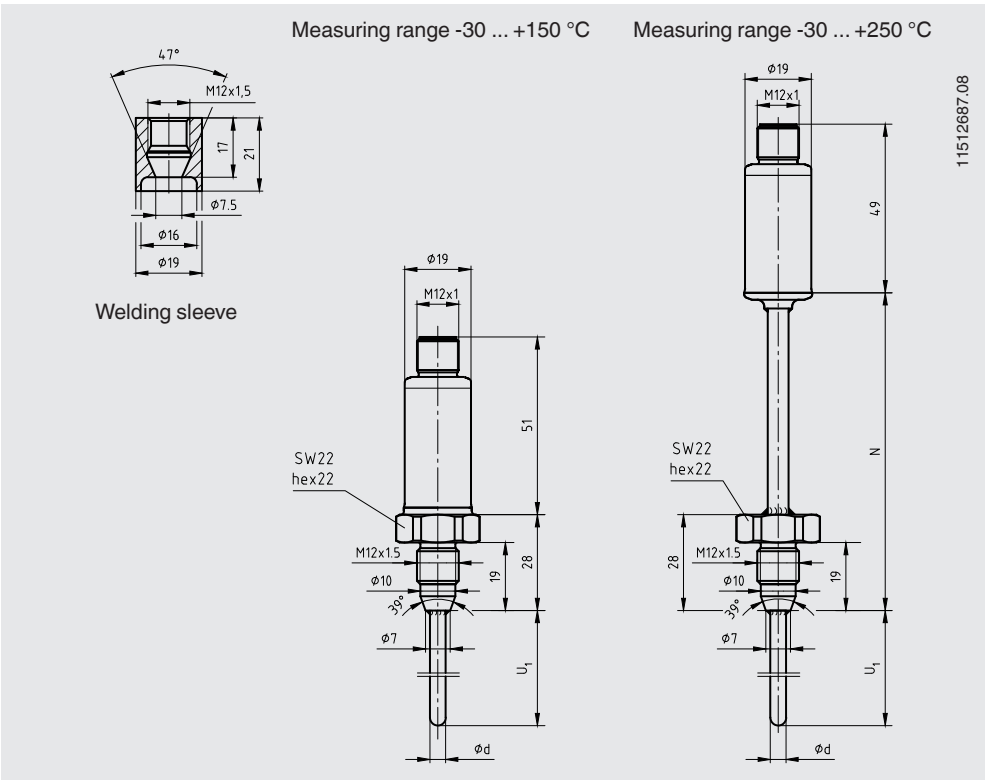

Process connection, tapered hygienic threaded connections with union nut

- Process connection G ⅛

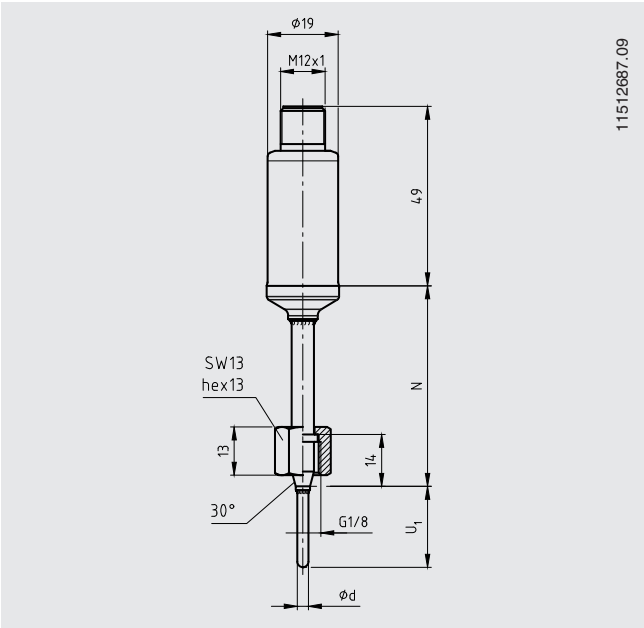

Process connection, Ingold connection

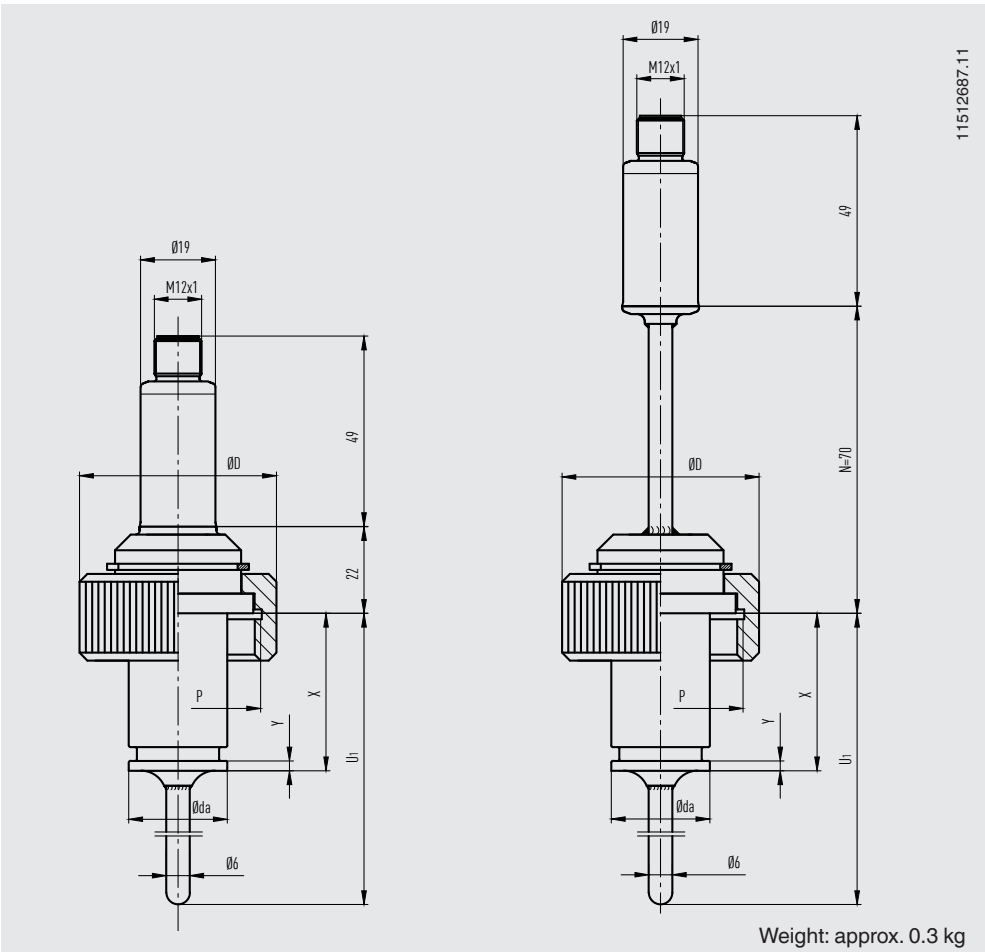

Further process connections and nominal widths available on request.

Configuration software WIKAsoft-TT

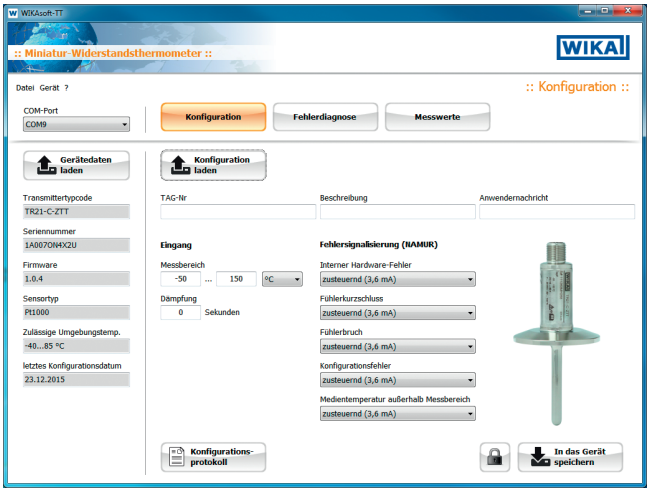

Configuration software (multilingual) as a download from www.wika.com

Connecting the PU-548 programming unit

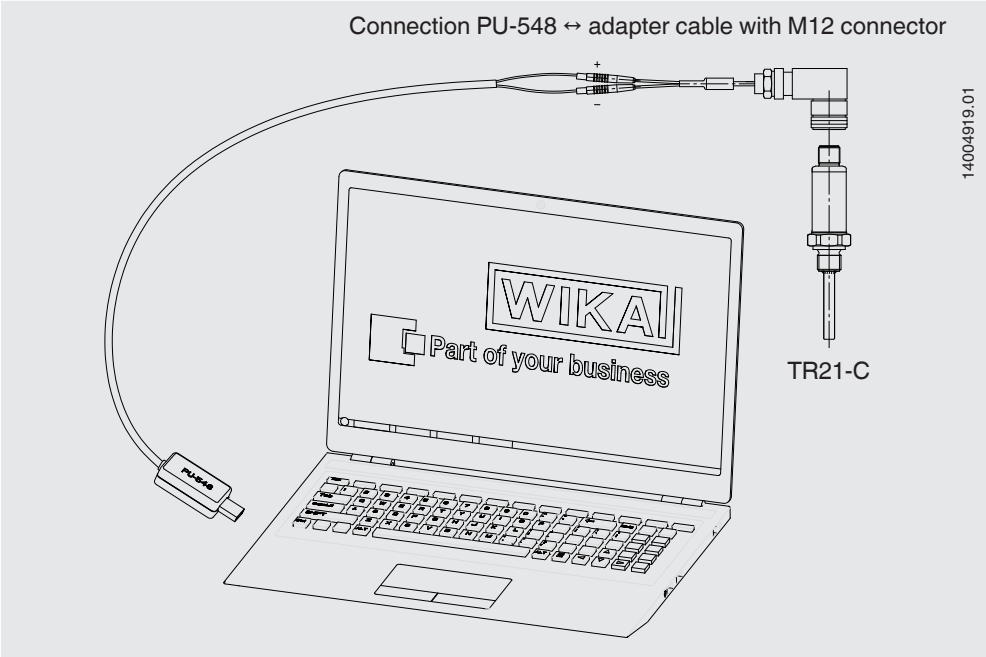

(predecessor, programming unit model PU-448, also compatible)

Accessories

Model	Special features		Order no.
Programming unit Model PU-548	■ Easy to use ■ LED status display ■ Compact design ■ No further voltage supply needed, neither for the programming unit nor for the transmitter (replaces programming unit model PU-448)		14231581
Adapter cable M12 to PU-548	Adapter cable for the connection of a model TR21-C resistance thermometer to the model PU-548 programming unit		14003193
M12 sealing cap with mounted PTFE sealing	Sealing cap for protecting the resistance thermometer during sterilisation in autoclaves		14113588
M12 connection cable	Cable socket straight, 4-pin, ingress protection IP67 ■ Temperature range -20 ... +80 °C ■ Suitable for hazardous areas	Cable length 2 m	14086880
		Cable length 5 m	14086883
	Cable socket straight, 4-pin, ingress protection IP69K, hygienic design ■ Temperature range -40 ... +80 °C ■ Not for hazardous areas	Cable length 3 m	14137167
		Cable length 5 m	14137168
	Angled socket, 4-pin, ingress protection IP67 ■ Temperature range -20 ... +80 °C ■ Suitable for hazardous areas	Cable length 2 m	14086889
		Cable length 5 m	14086891
	Angled socket, 4-pin, ingress protection IP69K, hygienic design ■ Temperature range -40 ... +80 °C ■ Not for hazardous areas	Cable length 3 m	14137169
		Cable length 5 m	14137170
Welding sleeves	With G ½ tapered hygienic threaded connection Material: Stainless steel 1.4435 (316L)		11422599
	With M12 tapered hygienic threaded connection Material: Stainless steel 1.4435 (316L)		11426721
Weld-in help 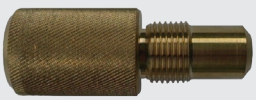	Weld-in mandrel for tapered hygienic threaded connection G ½ Material: CuZn alloy (brass)		11477742
	Weld-in mandrel for tapered hygienic threaded connection M12 Material: CuZn alloy (brass)		11476894

Welding sleeve G ½

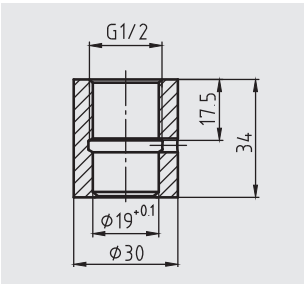

Welding sleeve M12

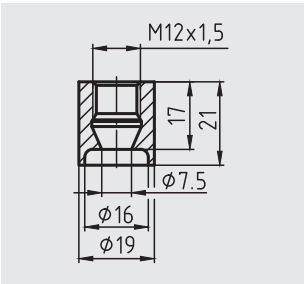

Weld-in mandrel G ½

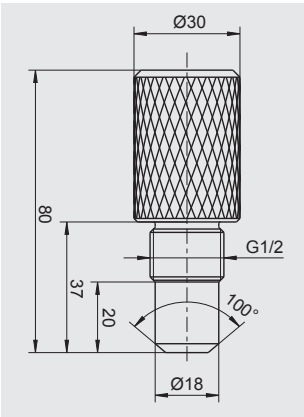

Weld-in mandrel M12

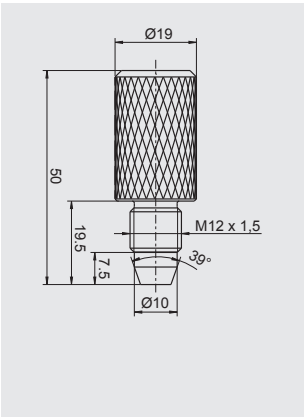

Ordering information

Model / Approval / Sensor or transmitter output / Sensor specification or transmitter configuration / Process temperature / Process connection / Protection tube diameter / Material of wetted parts / Insertion length U_1 / Neck length / Electrical accessories / Certificates / Options

Standard articles

Configurator

© 12/2010 WIKA Alexander Wiegand SE & Co. KG, all rights reserved.
The specifications given in this document represent the state of engineering at the time of publishing.
We reserve the right to make modifications to the specifications and materials.

WIKA Alexander Wiegand SE & Co. KG
Alexander-Wiegand-Straße 30
63911 Klingenberg/Germany
Tel. +49 9372 132-0
info@wika.de
www.wika.de