# Miniature resistance thermometer
# For sanitary applications, for orbital welding
# Model TR21-B

WIKA data sheet TE 60.27

for further approvals
see page 5

Configurator

Standard articles

## Applications

- Sanitary applications
- Food and beverage industry
- Bio and pharmaceutical industry, production of active ingredients

## Special features

- Sensor can be calibrated without having to open the process
- Simple and fast electrical connection using an M12 x 1 plug connection
- With direct sensor output (Pt100/Pt1000 in 3 or 4-wire version) or integrated transmitter with 4 ... 20 mA output signal, individually parameterisable with free-of-charge WIKAsoft-TT PC configuration software
- Wetted parts from stainless steel 1.4435
- Self-draining and dead-space minimised, materials and surface finish qualities in accordance with standards of hygienic design

**Model TR21-B with flow-through housing**

## Description

The model TR21-B resistance thermometer provides temperature measurement in sanitary applications and can be used for the measurement of liquid and gaseous media in the range of -30 ... +150 °C [-22 ... +302 °F]. For use in hazardous areas, intrinsically safe versions are available.

The connection ends are smooth and prepared for orbital welding. The process connections meet the stringent requirements, in terms of materials and design, of hygienic measuring points. All electrical components are protected against moisture (IP67 or IP69K).

The resistance thermometer is available with direct sensor output or integrated transmitter, which can be configured individually via the WIKAsoft-TT PC configuration software. Measuring range, dampening, error signalling per NAMUR NE 043 and TAG no. can be adjusted.

For easy calibration or maintenance, the sensor is interchangeable without having to open the process. Thus hygiene risks can be minimised and downtimes can be reduced.

The spring loading, integrated into the union nut, guarantees the contact between the sensor tip and the bottom of the protection tube and thus ensures a short response time and lasting high accuracy. Insertion length, process connection, sensor and connection method can each be selected for the respective application within the ordering information. The electrical connection is made via an M12 x 1 circular connector.

For applications requiring the sterilisation of the instrument in autoclaves, an especially temperature-resistant instrument version is available.



Smart in sensing

Data sheets showing similar products:
Protection tube for sanitary applications; model TW22; see data sheet TW 95.22
Protection tube for sanitary applications, for orbital welding; model TW61; see data sheet TW 95.61
Resistance thermometer, with flange connection; model TR22-A; see data sheet TE 60.22
Resistance thermometer, for orbital welding; model TR22-B; see data sheet TE 60.23
Miniature resistance thermometer, with flange connection; model TR21-A; see data sheet TE 60.26

## Specifications

| Measuring element | | |
|---|---|---|
| **Type of measuring element** | | |
| 4 ... 20 mA version (models TR21-B-xTT, TR21-B-xTB) | ■ Pt1000<br>(measuring current < 0.3 mA; self-heating can be ignored)<br>■ Face-sensitive Pt1000 [1]<br>(measuring current < 0.3 mA; self-heating can be ignored) | |
| Pt100 (model TR21-B-xPx)/Pt1000 (model TR21-B-xRx) version | ■ Pt100 (measuring current: 0.1 ... 1.0 mA)<br>■ Face-sensitive Pt100 (measuring current 0.1 ... 1.0 mA) [1]<br>■ Pt1000 (measuring current: 0.1 ... 0.3 mA)<br>■ Face-sensitive Pt1000 (measuring current 0.1 ... 0.3 mA) [1] | |
| | → For detailed specifications for Pt sensors, see Technical information IN 00.17 at www.wika.com. | |
| **Connection method** | | |
| 4 ... 20 mA version (models TR21-B-xTT, TR21-B-xTB) | 2-wire | |
| Pt100 (model TR21-B-xPx)/Pt1000 (model TR21-B-xRx) version | 3-wire | With a cable length of 30 m or longer, measuring deviations can occur |
| | 4-wire | The lead resistance can be ignored |
| **Tolerance value of the measuring element [2] per IEC 60751** | | |
| 4 ... 20 mA version (models TR21-B-xTT, TR21-B-xTB) | Class A | |
| Pt100 (model TR21-B-xPx)/Pt1000 (model TR21-B-xRx) version | ■ Class AA [3]<br>■ Class A | |

1) Face-sensitive measuring resistors, through their small design they serve to reduce the heat dissipation with short insertion lengths. Available for the temperature range up to 150 °C [302 °F].
For protection tube insertion lengths of less than 50 mm, face-sensitive measuring resistors are recommended.
For protection tube insertion lengths of less than 11 mm, face-sensitive measuring resistors are generally used.
2) Depending on the process connection, the deviation can be greater.
3) Class accuracy AA only valid in the temperature range 0 ... 150 °C [32 ... 302 °F]

| Accuracy specifications (4 ... 20 mA version) | |
|---|---|
| **Tolerance value of the measuring element [2] per IEC 60751** | Class A |
| **Measuring deviation of the transmitter per IEC 62828** | ±0.25 K |
| **Total measuring deviation in accordance with IEC 62828** | Measuring deviation of the measuring element + transmitter |
| **Influence of the ambient temperature** | 0.1 % of span / 10 K $T_a$ |
| **Influence of supply voltage** | ±0.025 % / V (depending on the supply voltage $U_B$) |
| **Influence of the load** | ±0.05 % / 100 Ω |
| **Linearisation** | Linear to temperature per IEC 60751 |
| **Linearisation error** | ±0.1 % [1] of the set measuring span |
| **Reference conditions** | |
| Ambient temperature $T_a$ ref | 23 °C |
| Supply voltage $U_B$ ref | DC 12 V |

1) ±0.2 % for start of measuring range less than 0 °C [32 °F]
2) Depending on the process connection, the deviation can be greater.

**Example calculation: Total measuring deviation**
(measuring range 0 ... 150 °C, load 200 Ω, supply voltage 16 V, ambient temperature 33 °C, process temperature 100 °C)

| | |
|---|---|
| Sensor element (class A per IEC 60751: 0.15+ (0.0020(t))): | ±0.350 K |
| Measuring deviation of the transmitter ±0.25 K: | ±0.250 K |
| Output error ±(0.1 % of 150 K): | ±0.150 K |
| Effect of load ±(0.05 % / 100 Ω of 150 K): | ±0.150 K |
| Influence of supply voltage ±(0.025 % / V of 150 K): | ±0.150 K |
| Influence of the ambient temperature ±(0.1 % / 10 K $T_a$ of 150 K): | ±0.150 K |

**Measuring deviation (typical)**
sqrt (0.35 $K^2$ + 0.25 $K^2$ + 0.15 $K^2$ + 0.15 $K^2$ + 0.15 $K^2$+ 0.15 $K^2$)
sqrt (0.275 $K^2$) = 0.524 K

**Measuring deviation (maximum)**
0.35 K + 0.25 K + 0.15 K + 0.15 K + 0.15 K + 0.15 K = 1.2 K

| Measuring range | | |
|---|---|---|
| **Temperature range** | | |
| 4 ... 20 mA version (models TR21-B-xTT, TR21-B-xTB) | -30 ... +150 °C [-22 ... +302 °F] 1) | |
| Pt100 (model TR21-B-xPx)/ Pt1000 (model TR21-B-xRx) version | Class AA | 0 ... 150 °C [32 ... 302 °F] |
| | Class A | -30 ... +150 °C [-22 ... +302 °F] |
| **Unit (4 ... 20 mA version)** | Configurable °C, °F, K | |
| **Temperature at the connector (Pt100, Pt1000 version)** | Max. 85 °C [185 °F] | |
| **Measuring span (4 ... 20 mA version)** | Minimum 20 K, maximum 300 K | |

1) The temperature transmitter should therefore be protected from temperatures over 85 °C [185 °F].

| Process connection | | |
|---|---|---|
| **Type of process connection** | ■ Flow-through housing<br>■ Angular housing | |
| **Protection tube** | | |
| Protection tube model | TW61 | |
| Protection tube design | → see drawings from page 10 | |
| Surface roughness | Per DIN 11866 row A, B | ■ $R_a$ < 0.8 µm<br>■ $R_a$ < 0.4 µm electropolished |
| | Per DIN 11866 row C, ASME-BPE | ■ $R_a$ < 0.76 µm<br>■ $R_a$ < 0.38 µm electropolished |
| Connection to thermometer | G 3/8" | |
| Material (wetted) | Per DIN 11866 row A, B | Stainless steel 1.4435 |
| | Per DIN 11866 row C, ASME-BPE | Stainless steel 316L |

→ For dimensions, see dimension tables from page 10

| Output signal (4 ... 20 mA version) | |
|---|---|
| **Analogue output** | 4 ... 20 mA, 2-wire |
| **Load $R_A$** | $R_A \leq (U_B - 10\ V) / 23\ mA$ with $R_A$ in Ω and $U_B$ in V |
| | The permissible load depends on the loop supply voltage. For communication with the instrument with programming unit PU-548, a max. load of 350 Ω is admissible. |
| **Load diagram** | 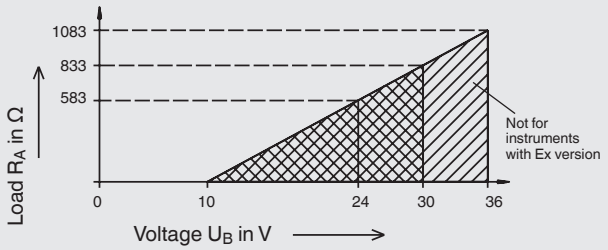 |

| Output signal (4 ... 20 mA version) | |
|---|---|
| **Factory configuration** | |
| Measuring range | Measuring range 0 ... 150 °C [32 ... 302 °F] |
| | Other measuring ranges are adjustable |
| Current signals for error signalling | Configurable in accordance with NAMUR NE 043<br>downscale ≤ 3.6 mA<br>upscale ≥ 21.0 mA |
| Current value for sensor short-circuit | Not configurable in accordance with NAMUR NE 043<br>downscale ≤ 3.6 mA |
| **Communication** | |
| Info data | TAG no., description and user message can be stored in transmitter |
| Configuration and calibration data | Permanently stored |
| Configuration software | WIKAsoft-TT<br>→ Configuration software (multilingual) as a download from www.wika.com |
| **Voltage supply** | |
| Supply voltage $U_B$ | DC 10 ... 30 V |
| Supply voltage input | Protected against reverse polarity |
| Permissible residual ripple of supply voltage | 10 % generated by $U_B$ < 3 % ripple of the output current |
| **Time response** | |
| Switch-on delay, electrical | Max. 4 s (time before the first measured value) |
| Warm-up time | After approx. 4 minutes, the instrument will function to the specifications (accuracy) given in the data sheet. |
| Response time (per IEC 60751) | $t_{50}$ < 3.2 s<br>$t_{90}$ < 7.3 s |

| Electrical connection | |
|---|---|
| **Connection type** | M12 x 1 circular connector (4-pin) |
| **Material** | Stainless steel 1.4404 |

## Pin assignment

Output signal 4 ... 20 mA
M12 x 1 circular connector (4-pin)

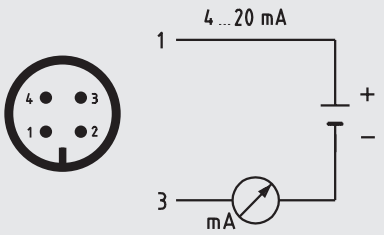


| Pin | Signal | Description |
|---|---|---|
| **1** | L+ | 10 ... 30 V |
| **2** | VQ | not connected |
| **3** | L- | 0 V |
| **4** | C | not connected |

Output signal Pt100 sensor
M12 x 1 circular connector (4-pin)

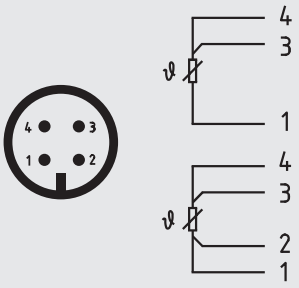

| Operating conditions | |
|---|---|
| **Ambient temperature range** | |
| 4 ... 20 mA version (models TR21-B-xTT, TR21-B-xTB) | -40 ... +85 °C [-40 ... +185 °F] |
| Pt100 (model TR21-B-xPx)/Pt1000 (model TR21-B-xRx) version | -50 ... +85 °C [-58 ... +185 °F] |
| | -40 ... +85 °C [-40 ... +185 °F] |
| **Climate class per IEC 60654-1** | |
| 4 ... 20 mA version (models TR21-B-xTT, TR21-B-xTB) | Cx (-40 ... +85 °C [-40 ... +185 °F], 5 ... 95 % r. h.) |
| Pt100 (model TR21-B-xPx)/Pt1000 (model TR21-B-xRx) version | Cx (-50 ... +85 °C [-58 ... +185 °F], 5 ... 95 % r. h.) |
| | 100 % r. h., condensation allowed |
| **Max. operating pressure** | Dependent on particular process connection |
| **Salt fog** | IEC 60068-2-11 |
| **Shock resistance per IEC 60068-2-27** | 50 g, 6 ms, 3 axes, 3 directions, three times per direction |
| **Maximum permissible autoclaving conditions** | Max. 134 °C, 3 bar abs., 100 % r. h., duration 20 min., max. 50 cycles |
| | Autoclavable with mounted protective cap at coupler connector |
| **Conditions for outdoor use (only applies to UL approval)** | ■ The instrument is suitable for applications with pollution degree 3.<br>■ The power supply must be suitable for operation above 2,000 m should the temperature transmitter be used at this altitude.<br>■ The instrument shall be installed in locations sheltered from the weather.<br>■ The instrument shall be installed sun/UV irradiation protected. |
| **Ingress protection (IP code)** | |
| Case with connected connector [1] | ■ IP67 per IEC/EN 60529<br>■ IP69 per IEC/EN 60529<br>■ IP69K per ISO 20653 |
| | The stated ingress protection only applies when plugged in using line connectors that have the appropriate ingress protection. |
| Coupler connector, not connected | IP67 per IEC/EN 60529 |
| **Weight in kg** | approx. 0.3 ... 2.5 (depending on version) |

1) Not tested with UL

## Approvals

| Logo | Description | Region |
|---|---|---|
| CE | **EU declaration of conformity** | European Union |
| | EMC directive [1] [2]<br>EN 61326 emission (group 1, class B) and immunity (industrial application) | |
| | Pressure equipment directive<br><br>For thermowells/protection tubes > DN 25 (1") and for the associated marking on the measuring instrument or thermowell/protection tube, WIKA confirms conformity with the pressure equipment directive in accordance with the conformity assessment procedure, module H.<br><br>For thermowells/protection tubes with nominal widths of ≤ DN 25 (1"), a CE marking in accordance with the pressure equipment directive (PED) is not permitted and therefore, they are designed and manufactured without CE marking in line with the applicable sound engineering practice. | |
| | RoHS directive | |
| c UL us LISTED | **UL - only for instrument version without explosion protection**<br>Safety (e.g. electr. safety, overpressure, ...) | USA and Canada |

## Optional approvals

| Logo | Description | | Region |
|---|---|---|---|
| | **EU declaration of conformity** | | European Union |
| | ATEX directive | | |
| | Hazardous areas | | |
| | Zone 0 gas | II 1G Ex ia IIC T1 ... T6 Ga | |
| | Zone 1 mounting to zone 0 gas | II 1/2G Ex ia IIC T1 ... T6 Ga/Gb | |
| | Zone 1 gas | II 2G Ex ia IIC T1 ... T6 Gb | |
| | Zone 20 dust | II 1D Ex ia IIIC T135 °C Da | |
| | Zone 21 mounting to zone 20 dust | II 1/2D Ex ia IIIC T135 °C Da/Db | |
| | Zone 21 dust | II 2D Ex ia IIIC T135 °C Db | |
| | **IECEx - in combination with ATEX** | | International |
| | Hazardous areas | | |
| | Zone 0 gas | Ex ia IIC T1 ... T6 Ga | |
| | Zone 1 mounting to zone 0 gas | Ex ia IIC T1 ... T6 Ga/Gb | |
| | Zone 1 gas | Ex ia IIC T1 ... T6 Gb | |
| | Zone 20 dust | Ex ia IIIC T135 °C Da | |
| | Zone 21 mounting to zone 20 dust | Ex ia IIIC T135 °C Da/Db | |
| | Zone 21 dust | Ex ia IIIC T135 °C Db | |
| | **CSA** | | USA and Canada |
| | Safety (e.g. electr. safety, overpressure, ...) | | |
| | Hazardous areas | | |
| | Class I, division 1 or 2, groups A, B, C, D T1 ... T6 | | |
| | Class I, zone 0 or 1, IIC Ex/AEx ia IIC T1 ... T6 Ga | | |
| | Class II / III, division 1 or 2, groups E, F, G T1 ... T6 / 135 °C | | |
| | Class II / III, zone 20 or 21, Ex/AEx ia IIIC T135 °C Da | | |
| | **EAC** | | Eurasian Economic Community |
| | EMC directive [1] | | |
| | Hazardous areas | | |
| | Zone 0 gas | 0Ex ia IIC T6 … T1 Ga X | |
| | Zone 1 gas | 1Ex ia IIC T6 … T1 Gb X | |
| | Zone 1 gas | Ex ia IIIC T135 °C Gb X | |
| | Zone 1 mounting to zone 0 gas | Ex ia IIC T6 … T1 Ga/Gb X | |
| | Zone 20 dust | Ex ia IIIC T135 °C Da X | |
| | Zone 20 dust | Ex ia IIIC T80 … T440 Da X | |
| | Zone 21 dust | Ex ia IIIC T80 … T440 Db X | |
| | **Ex Ukraine** | | Ukraine |
| | Hazardous areas | | |
| | Zone 0 gas | II 1G Ex ia IIC T6 … T1 Ga | |
| | Zone 20 dust | II 1D Ex ia IIIC T135 °C Da | |
| | Zone 1 mounting to zone 0 gas | II 1/2G Ex ia IIC T6 … T1 Ga/Gb | |
| | Zone 21 mounting to zone 20 dust | II 1/2D Ex ia IIIC T135 °C Da/Db | |
| | Zone 1 gas | II 2G Ex ia IIC T6 … T1 Gb | |
| | Zone 21 dust | II 2D Ex ia IIIC T135 °C Db | |
| | Zone 1 gas | II 2G Ex ib IIC T6 … T1 Gb | |
| | Zone 21 dust | II 2D Ex ib IIIC T135 °C Db | |
| | Zone 1 mounting to zone 0 gas | II 1/2G Ex ib IIC T6 … T1 Ga/Gb | |
| | Zone 21 mounting to zone 20 dust | II 1/2D Ex ib IIIC T135 °C Da/Db | |
| | **CCC** [3] | | China |
| | Hazardous areas | | |
| | Zone 0 gas | Ex ia IIC T1~T6 Ga | |
| | Zone 1 gas | Ex ia IIC T1~T6 Gb | |
| | Zone 1 mounting to zone 0 gas | Ex ia IIC T1~T6 Ga/Gb | |
| | Zone 20 dust | Ex iaD 20 T135 | |
| | Zone 21 dust | Ex iaD 21 T135 | |
| | Zone 21 mounting to zone 20 dust | Ex iaD 20/21 T135 | |
| | **PAC Russia**<br>Metrology, measurement technology | | Russia |
| | **PAC Kazakhstan**<br>Metrology, measurement technology | | Kazakhstan |

| Logo | Description | Region |
|---|---|---|
| - | **MChS**<br>Permission for commissioning | Kazakhstan |
| | **PAC Belarus**<br>Metrology, measurement technology | Belarus |
| | **PAC Uzbekistan**<br>Metrology, measurement technology | Uzbekistan |
| | **3-A** [4]<br>Hygienic Design | USA |
| | **EHEDG** [4]<br>Hygienic Design | European Union |

1) Only for built-in transmitter
2) During transient interferences (e.g. burst, surge, ESD) take into account an increased measuring deviation of up to 2 %.
3) Not for built-in transmitter
4) Confirmation of 3-A or EHEDG conformity only valid with separately selectable 2.2 test report

Instruments marked with “ia” may also be used in areas only requiring instruments marked with “ib” or “ic”.
If an instrument with “ia” marking has been used in an area with requirements in accordance with “ib” or “ic”, it can no longer be operated in areas with requirements in accordance with “ia” afterwards.

## Certificates (option)

| Certificates | | |
|---|---|---|
| **Certificates** | ■ 2.2 test report<br>■ 3.1 inspection certificate<br>■ DAkkS calibration certificate<br>■ Manufacturer's declaration regarding regulation (EC) 1935/2004 and (EC) 2023/2006<br>■ Certificate of the surface roughness of wetted parts | |
| **Hygienic certificates** | 3-A approval | EHEDG approval |
| Flow-through housing | For all dimensions | For all dimensions |
| Angular housing | DIN 11866 row A: DN 32 ... 100<br>DIN 11866 row B: DN 25 ... 80<br>DIN 11866 row C: DN 1 ½" ... 4" | DIN 11866 row A: DN 32 ... 100<br>DIN 11866 row B: DN 25 ... 80<br>DIN 11866 row C: DN 1 ½" ... 4" |

For calibration, the measuring insert is removed from the thermometer. The minimum length (metal part of the probe) for carrying out a measurement accuracy test 3.1 or DAkkS is 100 mm [3.94 in].
Calibration of shorter lengths on request.

→ Approvals and certificates, see website

## Patents, property rights

| Patent number | Description |
|---|---|
| **DE 102010037994**<br>**US 12 897.080** | Dead-space free welding nipple for protection tube model TW61 |

## Safety-relevant characteristic values for explosion-protected version (option)

### Thermometer with transmitter and 4 ... 20 mA output signal (models TR21-B-xTT, TR21-B-xTB)

Marking:

| Hazardous gas atmosphere | Temperature class | Ambient temperature range ($T_a$) | Maximum surface temperature ($T_{max}$) at the tip of the probe or protection tube |
|---|---|---|---|
| **II 1G Ex ia IIC T1 - T6 Ga**<br>**II 1/2G Ex ia IIC T1 - T6 Ga/Gb**<br>**II 2G Ex ia IIC T1 - T6 Gb** | T6 | -40 ... +45 °C | $T_M$ (medium temperature) + self-heating (15 K)<br>Pay attention to the special conditions for safe use. |
| | T5 | -40 ... +60 °C | |
| | T4 | -40 ... +85 °C | |
| | T3 | -40 ... +85 °C | |
| | T2 | -40 ... +85 °C | |
| | T1 | -40 ... +85 °C | |

| Hazardous dust atmosphere | Power $P_i$ | Ambient temperature range ($T_a$) | Maximum surface temperature ($T_{max}$) at the tip of the probe or protection tube |
|---|---|---|---|
| **II 1D Ex ia IIIC T135 °C Da**<br>**II 1/2D Ex ia IIIC T135 °C Da/Db**<br>**II 2D Ex ia IIIC T135 °C Db** | 750 mW | -40 ... +40 °C | $T_M$ (medium temperature) + self-heating (15 K)<br>Pay attention to the special conditions for safe use. |
| | 650 mW | -40 ... +70 °C | |
| | 550 mW | -40 ... +85 °C | |

Safety-related maximum values for the current loop circuit (+ and - connections):

| Parameters | Hazardous gas atmosphere | Hazardous dust atmosphere |
|---|---|---|
| **Terminals** | + / - | + / - |
| **Voltage $U_i$** | DC 30 V | DC 30 V |
| **Current $I_i$** | 120 mA | 120 mA |
| **Power $P_i$** | 800 mW | 750/650/550 mW |
| **Effective internal capacitance $C_i$** | 29.7 nF | 29.7 nF |
| **Effective internal inductance $L_i$** | Negligible | Negligible |
| **Maximum self-heating at the probe or protection tube tip** | 15 K | 15 K |

### Thermometer with direct sensor output with Pt100 (model TR21-B-xPx) or Pt1000 (model TR21-B-xRx)

Marking:

| Marking | Temperature class | Ambient temperature range ($T_a$) | Maximum surface temperature ($T_{max}$) at the tip of the probe or protection tube |
|---|---|---|---|
| **II 1G Ex ia IIC T1 - T6 Ga**<br>**II 1/2G Ex ia IIC T1 - T6 Ga/Gb**<br>**II 2G Ex ia IIC T1 - T6 Gb** | T6 | -50 ... +80 °C | $T_M$ (medium temperature) + self-heating<br>Pay attention to the special conditions for safe use. |
| | T5 | -50 ... +85 °C | |
| | T4 | -50 ... +85 °C | |
| | T3 | -50 ... +85 °C | |
| | T2 | -50 ... +85 °C | |
| | T1 | -50 ... +85 °C | |

| Marking | Power $P_i$ | Ambient temperature range ($T_a$) | Maximum surface temperature ($T_{max}$) at the tip of the probe or protection tube |
|---|---|---|---|
| **II 1D Ex ia IIIC T135 °C Da**<br>**II 1/2D Ex ia IIIC T135 °C Da/Db**<br>**II 2D Ex ia IIIC T135 °C Db** | 750 mW | -50 ... +40 °C | $T_M$ (medium temperature) + self-heating<br>Pay attention to the special conditions for safe use. |
| | 650 mW | -50 ... +70 °C | |
| | 550 mW | -50 ... +85 °C | |

Safety-related maximum values for the current loop circuit (connections in accordance with pin assignment 1 - 4):

| Parameters | Gas applications | Dust applications |
|---|---|---|
| **Terminals** | 1 - 4 | 1 - 4 |
| **Voltage $U_i$** | DC 30 V | DC 30 V |
| **Current $I_i$** | 550 mA | 250 mA |
| **Power $P_i$** | 1,500 mW | 750/650/550 mW |
| **Effective internal capacitance $C_i$** | Negligible | Negligible |
| **Effective internal inductance $L_i$** | Negligible | Negligible |
| **Maximum self-heating at the probe or protection tube tip** | ($R_{th}$) = 335 K/W | ($R_{th}$) = 335 K/W |

## Overview of the process connections

Flow-through housing

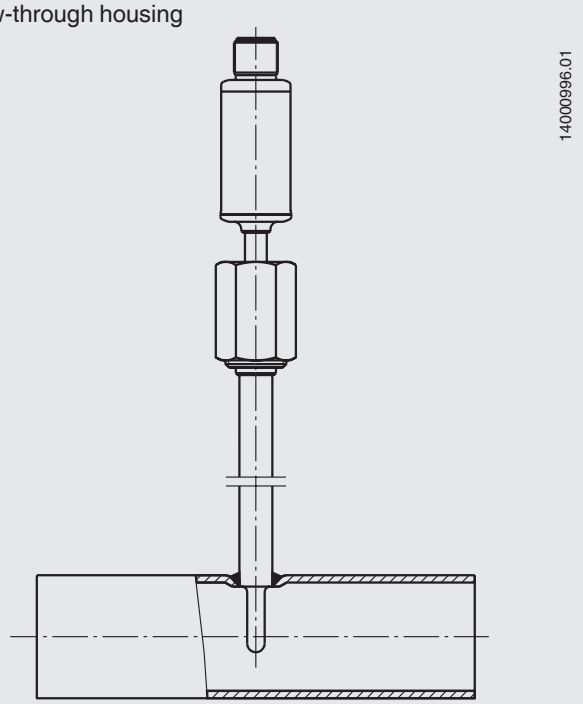


Angular housing

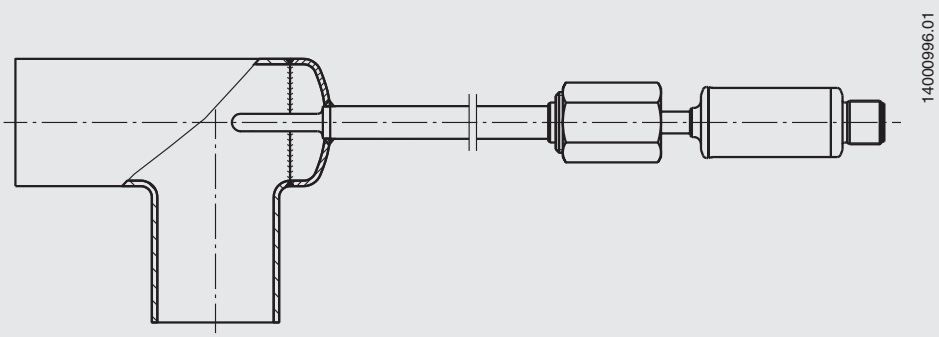

# Dimensions of the process connections in mm (protection tube model TW61)

**Flow-through housing**

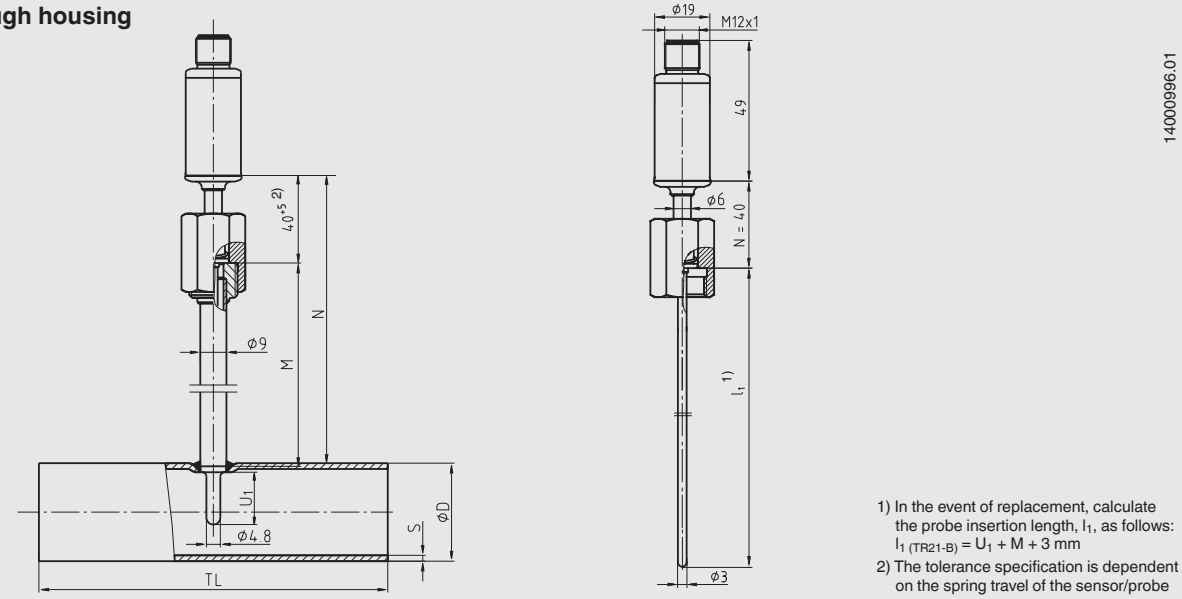


1) In the event of replacement, calculate the probe insertion length, $l_1$, as follows: $l_{1\,(TR21\text{-}B)} = U_1 + M + 3$ mm
2) The tolerance specification is dependent on the spring travel of the sensor/probe

| Nominal width of pipe | | Nominal pressure in bar | Outer diameter of pipe | Pipe schedule | Pipe length | Protection tube insertion length | Neck tube length |
|---|---|---|---|---|---|---|---|
| DN / OD | | PS 3) 4) | Ø D | s | TL | $U_1$ | M |
| DIN 11866 row A or metric | 10 | 25 | 13 | 1.5 | 70 | 6 | 51 |
| | 15 | 25 | 19 | 1.5 | 70 | 9 | 48 |
| | 20 | 25 | 23 | 1.5 | 80 | 11 | 46 |
| | 25 | 25 | 29 | 1.5 | 100 | 18 | 39 |
| | 32 | 25 | 35 | 1.5 | 110 | 18 | 39 |
| | 40 | 25 | 41 | 1.5 | 120 | 18 | 39 |
| | 50 | 25 | 53 | 1.5 | 160 | 30 | 27 |
| | 65 | 16 | 70 | 2.0 | 210 | 30 | 27 |
| | 80 | 16 | 85 | 2.0 | 260 | 45 | 32 |
| | 100 | 12.5 | 104 | 2.0 | 310 | 45 | 32 |
| DIN 11866 row B or ISO | 8 (13.5) | 25 | 13.5 | 1.6 | 64 | 6 | 51 |
| | 10 (17.2) | 25 | 17.2 | 1.6 | 68 | 9 | 48 |
| | 15 (21.3) | 25 | 21.3 | 1.6 | 72 | 11 | 46 |
| | 20 (26.9) | 25 | 26.9 | 1.6 | 110 | 11 | 46 |
| | 25 (33.7) | 25 | 33.7 | 2.0 | 120 | 18 | 39 |
| | 32 (42.4) | 25 | 42.4 | 2.0 | 130 | 18 | 39 |
| | 40 (48.3) | 25 | 48.3 | 2.0 | 130 | 18 | 39 |
| | 50 (60.3) | 25 | 60.3 | 2.0 | 180 | 30 | 27 |
| | 65 (76.1) | 16 | 76.1 | 2.0 | 220 | 30 | 27 |
| | 80 (88.9) | 16 | 88.9 | 2.3 | 260 | 45 | 32 |
| DIN 11866 row C or ASME BPE | 1/2" | 13.8 | 12.7 | 1.65 | 95.2 | 6 | 51 |
| | 3/4" | 13.8 | 19.05 | 1.65 | 101.6 | 9 | 48 |
| | 1" | 13.8 | 25.4 | 1.65 | 108.0 | 11 | 46 |
| | 1 1/2" | 13.8 | 38.1 | 1.65 | 120.6 | 18 | 39 |
| | 2" | 13.8 | 50.8 | 1.65 | 146.0 | 18 | 39 |
| | 2 1/2" | 13.8 | 63.5 | 1.65 | 158.8 | 30 | 27 |
| | 3" | 13.8 | 76.2 | 1.65 | 171.4 | 30 | 27 |
| | 4" | 13.8 | 101.6 | 2.11 | 209.6 | 45 | 32 |

3) Maximum operating temperature 150 °C
4) All protection tubes of this series that are internally pressurised, with a nominal diameter (DN) > 25 mm, are manufactured and tested to module H of the pressure equipment directive.

## Angular housing

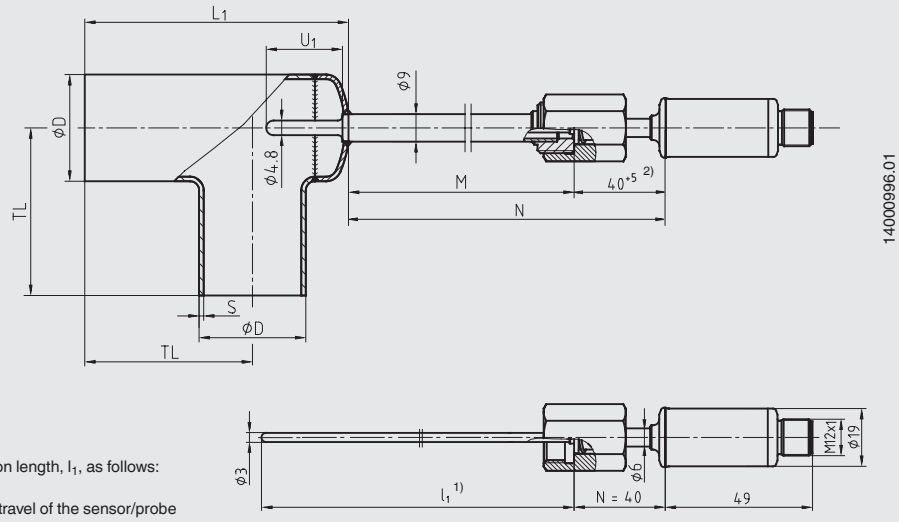


1) In the event of replacement, calculate the probe insertion length, $l_1$, as follows:
$l_{1\,(TR21\text{-}B)} = U_1 + M + 3$ mm
2) The tolerance specification is dependent on the spring travel of the sensor/probe

| Nominal width of pipe | | Nominal pressure in bar | Outer diameter of pipe | Pipe schedule | Pipe length | | Protection tube insertion length | Neck tube length |
|---|---|---|---|---|---|---|---|---|
| DN / OD | | PS 3) 4) | Ø D | s | TL | $L_1$ | $U_1$ | M |
| DIN 11866 row A or metric | 10 | 25 | 13 | 1.5 | 35 | 55 | 14 | 43 |
| | 15 | 25 | 19 | 1.5 | 35 | 55 | 18 | 39 |
| | 20 | 25 | 23 | 1.5 | 40 | 63 | 18 | 39 |
| | 25 | 25 | 29 | 1.5 | 50 | 77 | 30 | 27 |
| DIN 11866 row A or metric | 32 | 25 | 35 | 1.5 | 55 | 87 | 30 | 27 |
| | 40 | 25 | 41 | 1.5 | 60 | 97 | 30 | 27 |
| | 50 | 25 | 53 | 1.5 | 80 | 126 | 30 | 27 |
| | 65 | 16 | 70 | 2.0 | 105 | 165 | 45 | 32 |
| | 80 | 16 | 85 | 2.0 | 130 | 201 | 45 | 32 |
| | 100 | 12.5 | 104 | 2.0 | 155 | 241 | 45 | 32 |
| DIN 11866 row B or ISO | 8 (13.5) | 25 | 13.5 | 1.6 | 32 | 55 | 14 | 43 |
| | 10 (17.2) | 25 | 17.2 | 1.6 | 34 | 55 | 16 | 41 |
| | 15 (21.3) | 25 | 21.3 | 1.6 | 36 | 58 | 18 | 39 |
| | 20 (26.9) | 25 | 26.9 | 1.6 | 55 | 81 | 30 | 27 |
| DIN 11866 row B or ISO | 25 (33.7) | 25 | 33.7 | 2.0 | 60 | 91 | 30 | 27 |
| | 32 (42.4) | 25 | 42.4 | 2.0 | 65 | 102 | 30 | 27 |
| | 40 (48.3) | 25 | 48.3 | 2.0 | 65 | 108 | 30 | 27 |
| | 50 (60.3) | 25 | 60.3 | 2.0 | 90 | 145 | 45 | 32 |
| | 65 (76.1) | 16 | 76.1 | 2.0 | 110 | 173 | 45 | 32 |
| | 80 (88.9) | 16 | 88.9 | 2.3 | 130 | 203 | 45 | 32 |
| DIN 11866 row C or ASME BPE | 1/2" | 13.8 | 12.7 | 1.65 | 47.6 | 71 | 14 | 43 |
| | 3/4" | 13.8 | 19.05 | 1.65 | 50.8 | 71 | 18 | 39 |
| | 1" | 13.8 | 25.4 | 1.65 | 54.0 | 79 | 18 | 39 |
| DIN 11866 row C or ASME BPE | 1 1/2" | 13.8 | 38.1 | 1.65 | 60.3 | 94 | 30 | 27 |
| | 2" | 13.8 | 50.8 | 1.65 | 73.0 | 118 | 30 | 27 |
| | 2 1/2" | 13.8 | 63.5 | 1.65 | 79.4 | 134 | 45 | 32 |
| | 3" | 13.8 | 76.2 | 1.65 | 85.7 | 150 | 45 | 32 |
| | 4" | 13.8 | 101.6 | 2.11 | 104.8 | 190 | 45 | 32 |

3) Maximum operating temperature 150 °C
4) All protection tubes of this series that are internally pressurised, with a nominal diameter (DN) > 25 mm, are manufactured and tested to module H of the pressure equipment directive.

Due to the variable neck tube length M measuring inserts with standardised insertion lengths $l_1$ can be used. This minimises the variations and, thus, the stockholding of spare parts. At the same time, it ensures the use of the correct insertion length in the event of replacement.

## Connecting the PU-548 programming unit

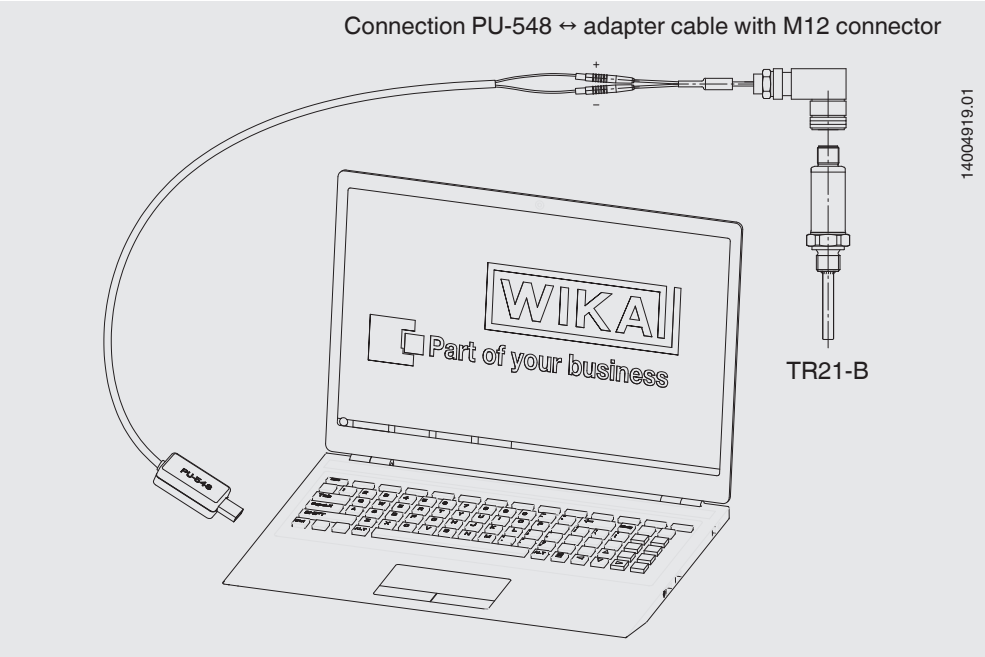


(predecessor, programming unit model PU-448, also compatible)

## Application example

### Temperature measurement for plant or measuring point validation

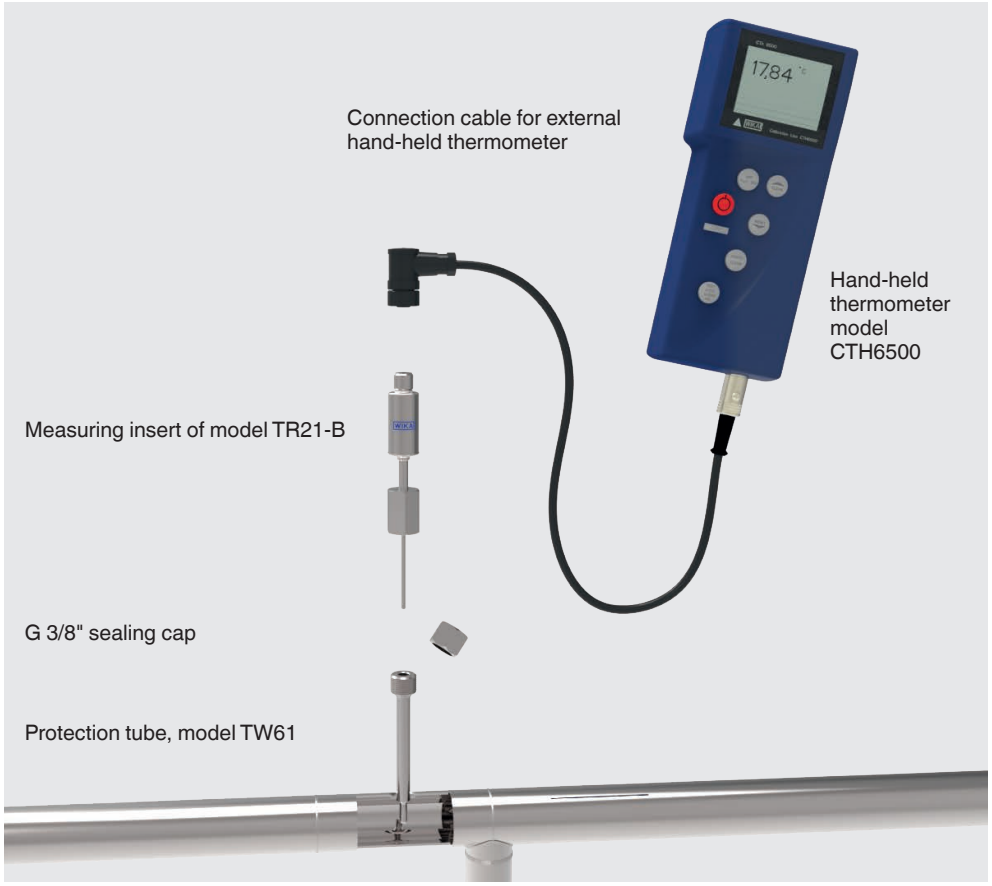


The measuring insert of the model TR21-B resistance thermometer, in combination with the model CTH6500 hand-held thermometer and the model TW61 protection tube, offers a simple and effective possibility for sterile validation of a temperature measuring point. Here, in the design phase, a model TW61 protection tube must be integrated in the pipeline, which will serve as the measuring point at a later date. To validate this measuring point, a resistance thermometer measuring insert with a spring-loaded tip is screwed into the protection tube and the temperature read from the connected hand-held thermometer.

Through a standardised probe insertion length, temperature measurement is possible using a single thermometer, even for protection tubes for different pipeline cross sections. The measuring point already available for the validation ensures that the sterile boundaries remain intact. Due to the defined contact pressure of the spring-loaded probe and the predetermined immersion depth in the pipeline, the temperature measurement is reproducible at any time. The time needed for the measurement is low.

### Further components

| Component | Order number |
|---|---|
| **G 3/8" sealing cap** | 14136849 |
| **O-ring**<br>for use with G 3/8" sealing cap | 0478709 |
| **Connection cable**<br>for the connection of model TR21-B resistance thermometers to model CTH6500 hand-held thermometers<br>Cable length 2 m [6.56 ft] | 14131257 |
| **Hand-held thermometer model CTH6500** (data sheet CT 55.10) | 14007838 |

## Hygienic design

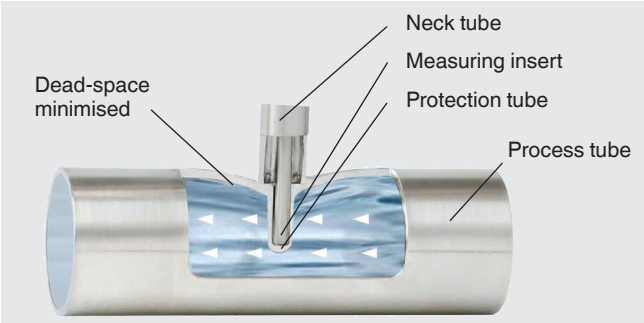


The patented hygienic design of the TW61 flow-through housing enables dead-space minimised, invasive temperature measurement and, through self-draining, a flexible mounting position.

With horizontal installation, make sure that the pipeline is slightly inclined for self-draining.

The installation is carried out by means of orbital welding. Thus, the weld seams are reproducible and controllable.

## Accessories

| Model | | Description | | Order no. |
|---|---|---|---|---|
| | **Programming unit Model PU-548** | ■ Easy to use<br>■ LED status display<br>■ Compact design<br>■ No further voltage supply needed, neither for the programming unit nor for the transmitter<br><br>(replaces programming unit model PU-448) | | 14231581 |
| | **Adapter cable M12 to PU-548** | Adapter cable for the connection of a model TR21-B resistance thermometer to the model PU-548 programming unit | | 14003193 |
| - | **M12 sealing cap with mounted PTFE sealing** | Sealing cap for protecting the resistance thermometer during sterilisation in autoclaves | | 14113588 |
| - | **M12 connection cable** | Cable socket straight, 4-pin, ingress protection IP67<br>Temperature range -20 ... +80 °C [-4 ... +176 °F]<br>For hazardous areas | Cable length 2 m [6.56 ft] | 14086880 |
| | | | Cable length 5 m [16.40 ft] | 14086883 |
| | | Cable socket straight., 4-pin, ingress protection IP69K, hygienic design<br>Temperature range -40 ... +80 °C [-40 ... +176 °F]<br>Not for hazardous areas | Cable length 3 m [9.84 ft] | 14137167 |
| | | | Cable length 5 m [16.40 ft] | 14137168 |
| | | Angled socket, 4-pin, ingress protection IP67<br>Temperature range -20 ... +80 °C [-4 ... +176 °F]<br>For hazardous areas | Cable length 2 m [6.56 ft] | 14086889 |
| | | | Cable length 5 m [16.40 ft] | 14086891 |
| | | Angled socket, 4-pin, ingress protection IP69K, hygienic design<br>Temperature range -40 ... +80 °C [-40 ... +176 °F]<br>Not for hazardous areas | Cable length 3 m [9.84 ft] | 14137169 |
| | | | Cable length 5 m [16.40 ft] | 14137170 |

### Ordering information

Model / Approval / Sensor or transmitter output / Sensor specification or transmitter configuration / Process temperature / Protection tube / Process connection / Material of wetted parts / Insertion length $U_1$ / Electrical accessories / Certificates / Options

Standard articles

Configurator

© 12/2010 WIKA Alexander Wiegand SE & Co. KG, all rights reserved.
The specifications given in this document represent the state of engineering at the time of publishing.
We reserve the right to make modifications to the specifications and materials.



**WIKA Alexander Wiegand SE & Co. KG**
Alexander-Wiegand-Straße 30
63911 Klingenberg/Germany
Tel. +49 9372 132-0
info@wika.de
www.wika.de