Resistance thermometer
For sanitary applications, interchangeable sensor
Model TR22-A

for further approvals,
see page 15

Configurator

Standard articles

Applications

- Sanitary applications
- Food and beverage industry
- Bio and pharmaceutical industry, production of active ingredients

Special features

- Simplified calibration through removable measuring inserts
- Materials and surface finish quality in accordance with the standards of hygienic design
- Stainless steel head in optimised hygienic design, easily cleanable in all mounting positions (patent, property right: GM 000984349)
- Pt100, 4 … 20 mA or HART® protocol

Model TR22-A with VARINLINE® connection
Options: Sealing combination at neck tube, cable gland in hygienic design

Description

The model TR22-A resistance thermometer is used for temperature measurement in sanitary applications. The process connections meet the stringent requirements, in terms of materials and design, of hygienic measuring locations. With increased hygienic requirements for the ambient areas around the measuring location, a stainless steel head is available in an optimised hygienic design. This enables easy cleaning of the measuring instrument, particularly for splash zones in food production.

Due to the rotatable threaded connection to the connection head, it is possible to loosen the connection head and to adjust it in the desired position. The connection head can be removed together with the measuring insert. This allows the resistance thermometer to be calibrated along with the whole measuring chain, i.e. without disconnecting the electrical connections. In addition, this avoids having to open the process, and thus the risk of contamination is minimised.

The spring-loaded measuring insert guarantees the contact between the sensor tip and the bottom of the protection tube and thus ensures a fast response time and high accuracy.

The welded junction between the protection tube and the flange makes the use of a sealing as additional material in those areas redundant which are in contact with the product.

Smart in sensing

Data sheets showing similar products:
Miniature resistance thermometer, with flange connection; model TR21-A; see data sheet TE 60.26
Miniature resistance thermometer, for orbital welding; model TR21-B; see data sheet TE 60.27
Miniature resistance thermometer, with welded flange connection; model TR21-C; see data sheet TE 60.28
Resistance thermometer, for orbital welding; model TR22-B; see data sheet TE 60.23

Specifications

Measuring element		
Type of measuring element	■ Pt100 (thin-film) ■ Face-sensitive Pt100 (thin-film) [1]	
	→ For detailed specifications for Pt sensors, see Technical information IN 00.17 at www.wika.com.	
Measuring current		
Transmitter version	Model T15	< 0.2 mA
	Model T32	< 0.3 mA
Pt100 version (without transmitter)	0.1 ... 1.0 mA	
Connection method		
Transmitter version	■ 1 x 3-wire ■ 1 x 4-wire	
Pt100 version (without transmitter)	■ 1 x 3-wire ■ 1 x 4-wire ■ 2 x 3-wire	
Tolerance value of the measuring element [2] per IEC 60751	■ Class AA ■ Class A ■ Class B	0 ... 150 °C -30 ... +250 °C -50 ... +250 °C

1) Face-sensitive measuring resistors, through their small design they serve to reduce the heat dissipation with short insertion lengths. Available for the temperature range up to 150 °C [302 °F].
For protection tube insertion lengths of less than 50 mm, face-sensitive measuring resistors are recommended.
For protection tube insertion lengths of less than 11 mm, face-sensitive measuring resistors are generally used.
2) Specification is only valid for the measuring element. Depending on the process connection, the deviation can be bigger.

→ For accuracy specifications of built-in temperature transmitters, see respective transmitter data sheet

Measuring range	
Temperature range	-50 ... +250 °C [-58 ... +482 °F] [1]

1) The connection head should therefore be protected from temperatures over 80 °C [176 °F].

Connection head

Model		Material	Cable inlet thread size	Ingress protection (max.) [1] IEC/EN 60529	Cap	Surface
	BS	Aluminium	■ M20 x 1.5 ■ M12 x 1 coupler connector (4-pin)	IP65 [3]	Flat cover with 2 screws	Blue, painted (RAL 5022)
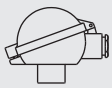	**BSZ**	Aluminium	■ M20 x 1.5 ■ M12 x 1 coupler connector (4-pin)	IP65 [3]	Spherical hinged cover with cylinder head screw	Blue, painted (RAL 5022)
	BSZ-K	PAV antistatic PA12	■ M20 x 1.5 ■ M12 x 1 coupler connector (4-pin)	IP65	Spherical hinged cover with cylinder head screw	Black
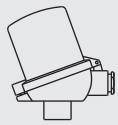	**BSZ-H**	Aluminium	■ M20 x 1.5 ■ M12 x 1 coupler connector (4-pin)	IP65 [3]	Raised hinged cover with cylinder head screw	Blue, painted (RAL 5022)
	BSZ-HK	PAV antistatic PA12	■ M20 x 1.5 ■ M12 x 1 coupler connector (4-pin)	IP65	Raised hinged cover with cylinder head screw	Black
	BSZ-H / DIH10 [2]	Aluminium	■ M20 x 1.5 ■ M12 x 1 coupler connector (4-pin)	IP65	Raised hinged cover with cylinder head screw	Blue, painted (RAL 5022)

Connection head						
Model		**Material**	**Cable inlet thread size**	**Ingress protection (max.) [1] IEC/EN 60529**	**Cap**	**Surface**
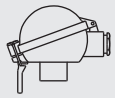	**BSS**	Aluminium	■ M20 x 1.5 ■ M12 x 1 coupler connector (4-pin)	IP65	Spherical hinged cover with clamping lever	Blue, painted (RAL 5022)
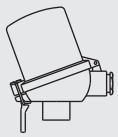	**BSS-H**	Aluminium	■ M20 x 1.5 ■ M12 x 1 coupler connector (4-pin)	IP65	Raised hinged cover with clamping lever	Blue, painted (RAL 5022)
	BVS	Stainless steel (1.4308)	■ M20 x 1.5 ■ M12 x 1 coupler connector (4-pin)	IP65	Screw-on lid, hygienic design	Natural finish, electropolished
	BVC	Stainless steel (1.4571)	■ M16 x 1.5 ■ M12 x 1 coupler connector (4-pin)	IP68 [4]	Flat screw-on lid	Natural finish
	KN4-A	Aluminium	■ M20 x 1.5 ■ M12 x 1 coupler connector (4-pin)	IP65 [3]	Screw-on lid	Blue, painted (RAL 5022)
	KN4-P	Polypropylene	■ M20 x 1.5 ■ M12 x 1 coupler connector (4-pin)	IP65 [3]	Screw-on lid	White

1) IP ingress protection of the connection head. The IP ingress protection of the complete TR22-A instrument does not necessarily have to correspond to the connection head.
2) DIH10 LED display
3) Ingress protections describing temporary or permanent immersion, on request
4) Max. IP65 for cable inlet with M12 x 1 coupler connector (4-pin)

Further thread sizes on request

Cable inlet with M12 x 1 coupler connector (4-pin)

Transmitter	Model T15	Model T32
Transmitter data sheet	TE 15.01	TE 32.04
Figure		
Analogue output	4 ... 20 mA	■ 4 ... 20 mA ■ HART® protocol
Possible mounting combinations		
BVC	○	○
BVS	○	○
BS	-	-
BSZ / BSZ-K	○	○
BSZ-H / BSZ-HK	●	●
KN4-P / KN4-A	○	○

Mounting of 2 transmitters on request

Legend
○ Mounted instead of terminal block
● Mounted within the cover of the connection head
- Mounting not possible

Process connection	
Type of process connection	■ TRI-CLAMP® and Clamp per DIN 32676 ■ VARINLINE® ■ NEUMO BioControl® ■ Union nut DIN 11851 ■ Aseptic connections per DIN 11864 ■ Union nut SMS ■ Process connection, straight ■ Welding ball ■ Ball-type compression fitting ■ Collar-type compression fitting ■ Ingold connection
	Other process connections on request
Measuring insert diameter (Pt100 version)	3 mm
Protection tube	
Protection tube model	TW22
Protection tube diameter	■ 6 mm ■ Protection tube tip stepped down to 4.5 mm (from U_1 > 25 mm) ■ 0.25 in ■ Protection tube tip stepped down to 0.2 in (from U_1 > 1 in)
Surface roughness	■ R_a ≤ 0.76 µm (SF3 per ASME BPE) ■ R_a ≤ 0.38 µm (SF4 per ASME BPE) ■ R_a ≤ 0.38 µm electropolished (SF4 per ASME BPE)
Connection to thermometer	M24 x 1.5
Insertion length U_1 [1)]	■ 25 mm [1 in] ■ 50 mm [2 in] ■ 75 mm [3 in] ■ 100 mm [4 in] ■ 150 mm [6 in] ■ 200 mm [8 in]
	Other insertion lengths on request

Process connection		
Neck tube diameter	To DN 20	9 mm [0.35 in] per DIN 11851, milk thread fitting: 12 mm [0.5 in]
	From DN 25	12 mm [0.5 in]
Neck tube length M	85 mm [3.35 in], others on request	
Material (wetted)	Stainless steel 1.4435 (316L, UNS S31603)	
Sealing combination (option)	Transition from the connection head to the protection tube is effected via an optional sealing combination (polyurethane) of flat gasket and wiper	
	■ Permanently prevents the penetration and depositing of humidity and impurities in this area (IP68) ■ Simplifies cleaning considerably (in combination with the patented BVS head and the hygienic cable gland, an easy to clean and hygienic measuring location results, even in areas which are not in contact with the product)	
	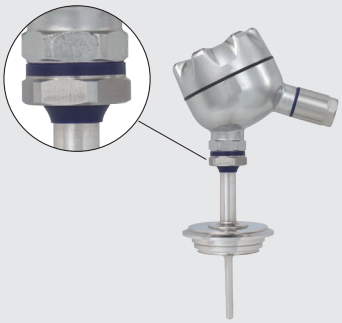	

1) For the TR22-A design without protection tube, the insertion length is defined by the dimension l_1 from the lower edge of the connection head to the tip of the measuring insert (see "Dimensions of the connection heads in mm"). The tip thickness of the protection tube can be neglected for dimensioning. It is offset by the spring travel of the measuring insert.

→ For dimensions, see dimension tables from page 11

VARINLINE® is a registered trademark of the company GEA Tuchenhagen (former designation: VARIVENT®).
BioControl® is a registered trademark of the company NEUMO.

Output signal (transmitter version)		
Analogue output		
Transmitter models T15, T32	4 ... 20 mA	
Transmitter model T32	HART® protocol	
Factory configuration (transmitter)	→ Customer-specific configuration available on request	
Sensor	Pt100	
Connection method	3-wire	
Measuring range	Measuring range 0 ... 150 °C [32 ... 302 °F]	
	Other measuring ranges are adjustable	
Time response		
Response time per IEC 60751	Transmitter version	t_{50} < 4.7 s or t_{90} < 12.15 s + response time of the respective transmitter → see data sheet for the respective transmitter
	Pt100 version	t_{50} < 4.7 s t_{90} < 12.15 s

→ For further details on built-in temperature transmitters, see respective transmitter data sheet

Operating conditions	
Ambient temperature range	-40 ... +85 °C [-40 ... +185 °F]
Storage temperature range	-40 ... +85 °C [-40 ... +185 °F]

Approvals

Logo	Description	Country
CE	**EU declaration of conformity**	European Union
	EMC directive [1)] EN 61326 emission (group 1, class B) and immunity (industrial application)	
	RoHS directive	

Optional approvals

Logo	Description	Country
CE Ex	**EU declaration of conformity**	European Union
	ATEX directive Hazardous areas - Ex i Zone 0 gas — II 1G Ex ia IIC T1 ... T6 Ga Zone 1 mounting to zone 0 gas — II 1/2G Ex ia IIC T1 ... T6 Ga/Gb Zone 1 gas — II 2G Ex ia IIC T1 ... T6 Gb Zone 20 dust — II 1D Ex ia IIIC T125 ... T65 °C Da Zone 21 mounting to zone 20 dust — II 1/2D Ex ia IIIC T125 ... T65 °C Da/Db Zone 21 dust — II 2D Ex ia IIIC T125 ... T65 °C Db - Ex e [2)] Zone 1 gas — II 2G Ex eb IIC T1 ... T6 Gb [4)] Zone 2 gas — II 3G Ex ec IIC T1 ... T6 Gc X Zone 21 dust — II 2D Ex tb IIIC TX °C Db [4)] Zone 22 dust — II 3D Ex tc IIIC TX °C Dc X - Ex n [2)] Zone 2 gas — II 3G Ex nA IIC T1 ... T6 Gc X Zone 22 dust — II 3D Ex tc IIIC TX °C Dc X	
IEC IECEx	**IECEx - in combination with ATEX** Hazardous areas - Ex i Zone 0 gas — Ex ia IIC T1 ... T6 Ga Zone 1 mounting to zone 0 gas — Ex ia IIC T1 ... T6 Ga/Gb Zone 1 gas — Ex ia IIC T1 ... T6 Gb Zone 20 dust — Ex ia IIIC T125 ... T65 °C Da Zone 21 mounting to zone 20 dust — Ex ia IIIC T125 ... T65 °C Da/Db Zone 21 dust — Ex ia IIIC T125 ... T65 °C Db	International
EAC Ex	**EAC**	Eurasian Economic Community
	EMC directive [1)]	
	Hazardous areas - Ex i Zone 0 gas — 0Ex ia IIC T6…T1 Ga X Zone 1 gas — 1Ex ia IIC T6…T1 Gb X Zone 20 dust — Ex ia IIIC T80…T440 Da X Zone 21 dust — Ex ia IIIC T80…T440 Db X - Ex n Zone 2 gas — 2Ex nA IIC T6….T1 Gc X	
	Ex Ukraine Hazardous areas - Ex i Zone 0 gas — II 1G Ex ia IIC T1...T6 Ga Zone 1 gas — II 2G Ex ia IIC T1...T6 Gb Zone 20 dust — II 1D Ex ia IIIC T65°C Da Zone 21 dust — II 2D Ex ia IIIC T65°C Db	Ukraine
INMETRO	**INMETRO**	Brazil
	Metrology, measurement technology	
	Hazardous areas - Ex i Zone 0 gas — Ex ia IIC T3 ... T6 Ga Zone 1 mounting to zone 0 gas — Ex ib IIC T3 ... T6 Ga/Gb Zone 20 dust — Ex ia IIIC T125 ... T65 °C Da Zone 21 mounting to zone 20 dust — Ex ib IIIC T125 ... T65 °C Da/Db	

Logo	Description			Country
	CCC [3]			China
	Hazardous areas			
	- Ex i	Zone 0 gas	Ex ia IIC T1~T6 Ga	
		Zone 1 gas	Ex ia IIC T1~T6 Gb	
		Zone 2 gas	Ex ic IIC T1~T6 Gc	
		Zone 20 dust	Ex iaD 20 T65/T95/T125	
		Zone 21 dust	Ex iaD 21 T65/T95/T125	
	- Ex e	Zone 1 gas	Ex eb IIC T1~T6 Gb	
		Zone 2 gas	Ex ec IIC T1~T6 Gc	
	- Ex n	Zone 2 gas	Ex nA IIC T1~T6 Gc	
	KCs - KOSHA			South Korea
	Hazardous areas			
	- Ex i	Zone 0 gas	Ex ia IIC T4 ... T6	
		Zone 1 gas	Ex ib IIC T4 ... T6	
-	**PESO**			India
	Hazardous areas			
	- Ex i	Zone 0 gas	Ex ia IIC T1 ... T6 Ga	
		Zone 1 mounting to zone 0 gas	Ex ib IIC T3 ... T6 Ga/Gb	
		Zone 1 gas	Ex ib IIC T3 ... T6 Gb	
	KazInMetr			Kazakhstan
	Metrology, measurement technology			
-	**MTSCHS**			Kazakhstan
	Permission for commissioning			
	Uzstandard			Uzbekistan
	Metrology, measurement technology			
	3-A [4]			USA
	Sanitary Standard			
	EHEDG [4]			European Union
	Hygienic Equipment Design			

1) Only for built-in transmitter
2) Only with connection head, model BSZ, BSZ-H (see “Connection head”)
3) Without transmitter
4) Confirmation of 3-A or EHEDG conformity only valid with separately selectable 2.2 test report

Instruments marked with “ia” may also be used in areas only requiring instruments marked with “ib” or “ic”.
If an instrument with “ia” marking has been used in an area with requirements in accordance with “ib” or “ic”, it can no longer be operated in areas with requirements in accordance with “ia” afterwards.

Certificates (option)

Certificates		
Certificates	■ 2.2 test report ■ 3.1 inspection certificate ■ DAkkS calibration certificate, traceable and accredited in accordance with ISO/IEC 17025 ■ Manufacturer's declaration regarding regulation (EC) 1935/2004 ■ Certificate of the surface roughness of wetted parts	
Hygienic certificates	3-A approval	EHEDG approval
Clamp	Yes	Yes [2)]
VARINLINE®	Yes	Yes
BioControl®	Yes	No
DIN 11851	Yes [1)]	Yes [2)]
DIN 11864	Yes	Yes
Welding ball	Yes	No
Compression fitting	No	No
SMS	No	No
Ingold connection	No	No

1) In combination with
- ASEPTO-STAR k-flex upgrade gaskets from Kieselmann GmbH, Germany or
- SKS gasket set DIN 11851 EHEDG from Siersema Komponenten Service (S.K.S.) B.V., Netherlands

2) In combination with
T-ring seals from Combifit International B. V., Netherlands

For calibration, the measuring insert is removed from the thermometer. The minimum length (metal part of the probe) for carrying out a 3.1 measurement accuracy test or DAkkS is 100 mm [3.94 in].
Calibration of shorter minimum lengths on request.

For approvals and certificates, see website

Patents, property rights

Case with easily cleanable twist crown, integrated into the case cap (GM 000984349)

Electrical connection

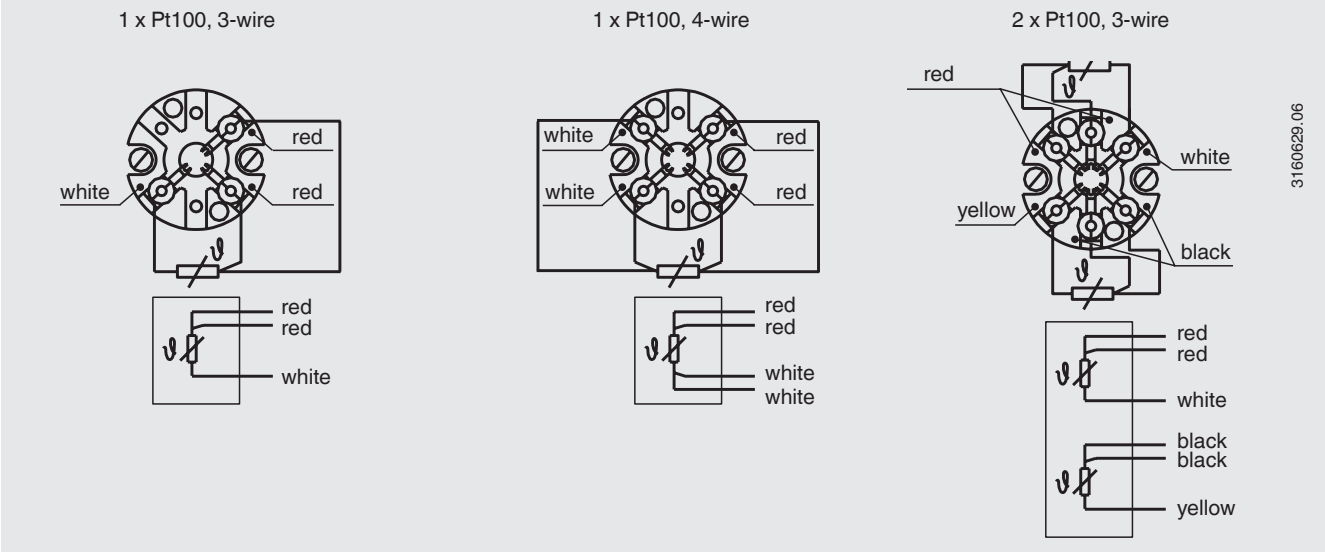

For the electrical connections of built-in temperature transmitters, see the corresponding data sheets or operating instructions.

Overview of combinations

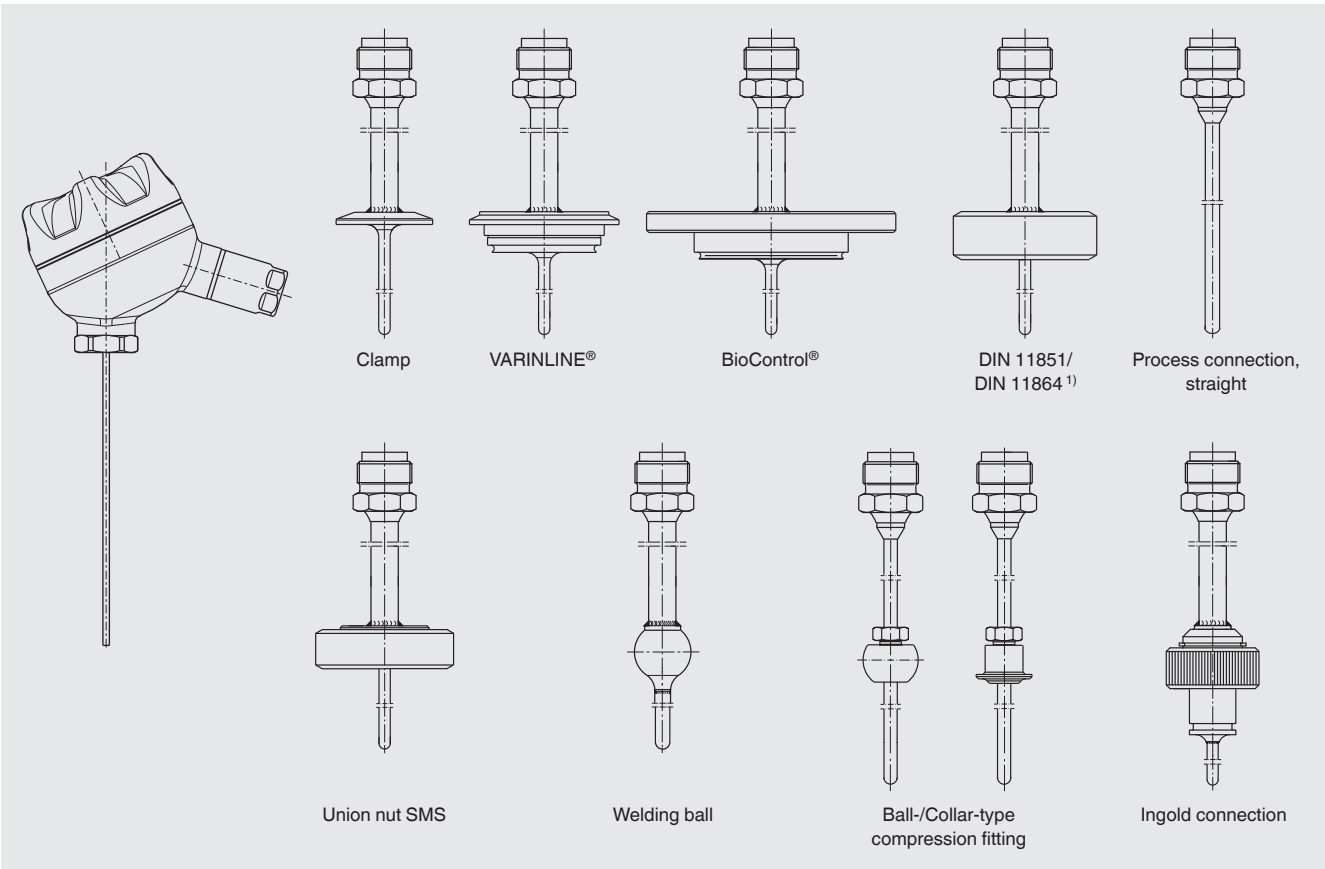

1) Process connections per DIN 11864-2 and DIN 11864-3, see “Dimensions of the process connections in mm”

VARINLINE® is a registered trademark of the company GEA Tuchenhagen (former designation: VARIVENT®).
BioControl® is a registered trademark of the company NEUMO.

Dimensions in mm

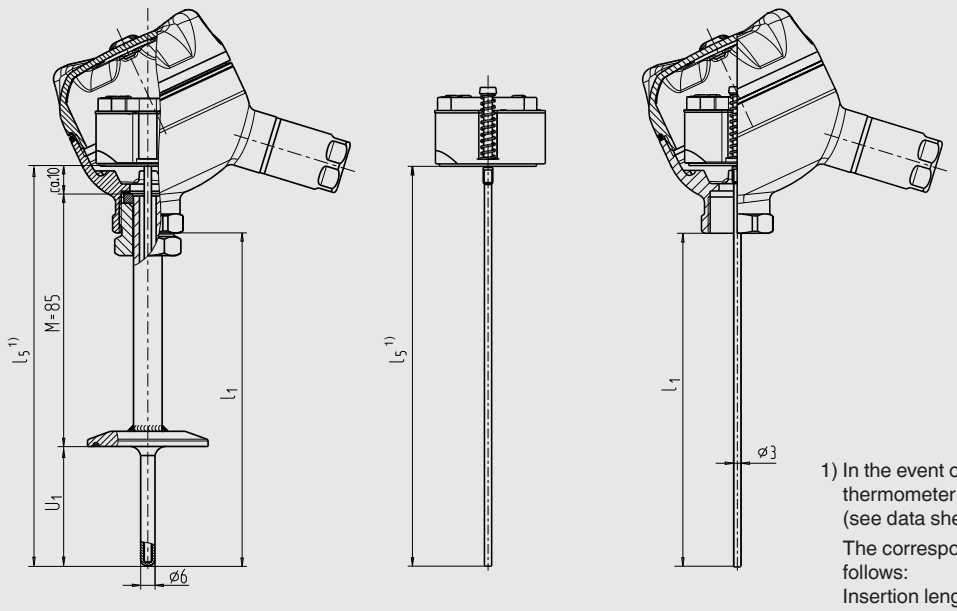

1) In the event of replacement, select a resistance thermometer measuring insert model TR11-A. (see data sheet TE 60.13)
The corresponding sensor length, l_5, is calculated as follows:
Insertion length U_1 + neck tube length M (85 mm) + 10 mm

Dimensions of the connection heads in mm

Model BVC

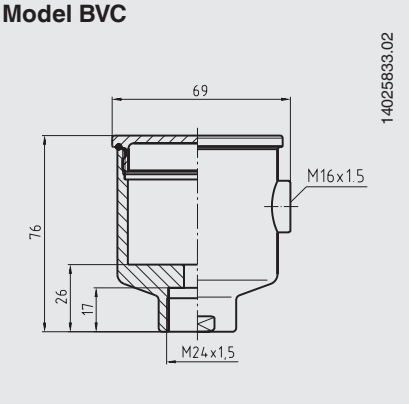

Model BVS

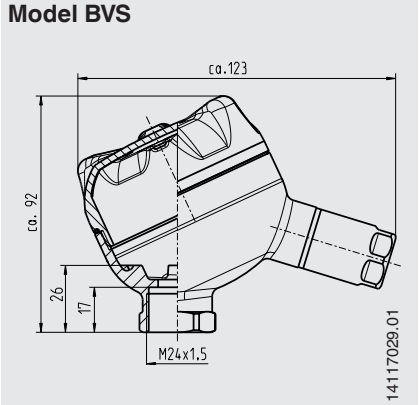

Model BS

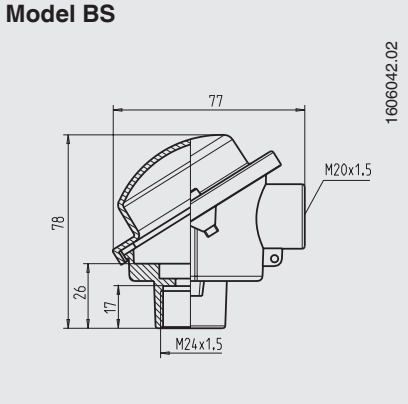

Models BSZ, BSZ-K

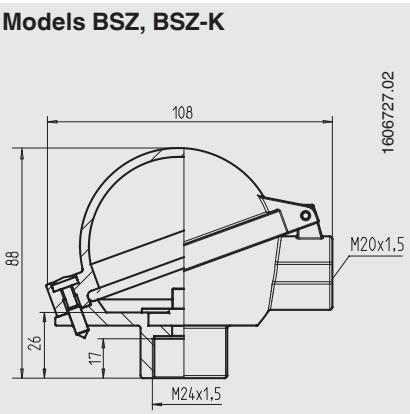

Models BSZ-H, BSZ-HK

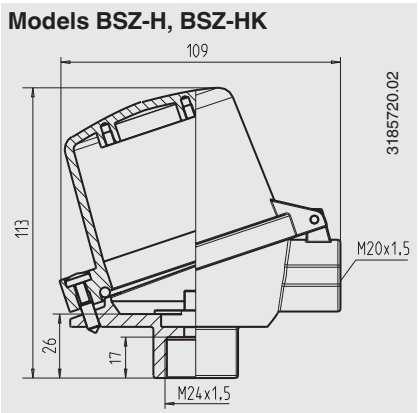

Models KN4-P, KN4-A

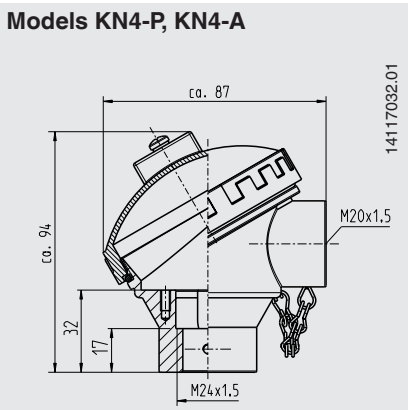

Dimensions of the process connections in mm (protection tube model TW22)

Clamp process connection

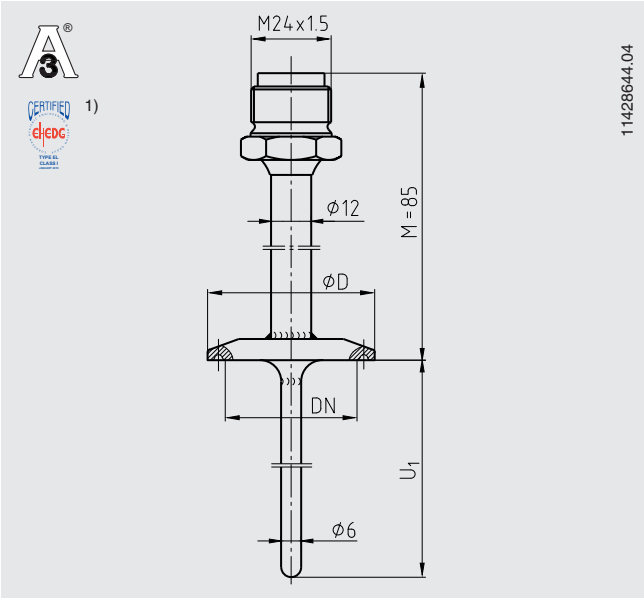

U_1 = variable insertion length

1) In combination with
T-ring seals from Combifit International B. V., Netherlands

VARINLINE® process connection

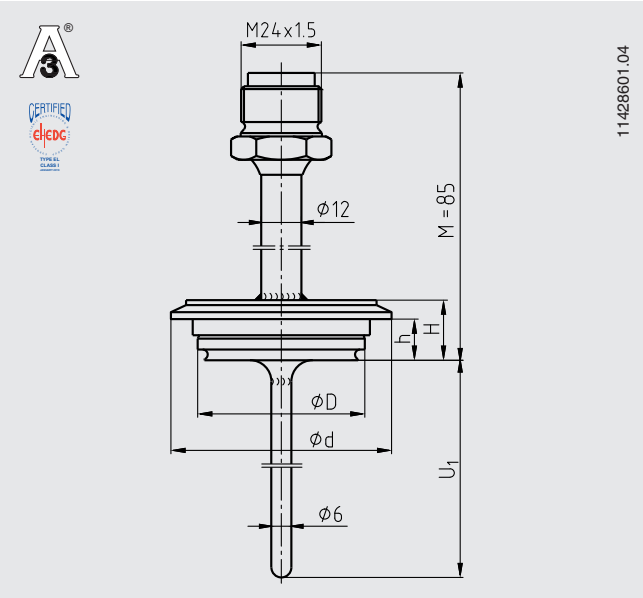

U_1 = variable insertion length

Dimensions for clamp process connection

Process connection	Nominal width in mm/inch	PN in bar	Dimensions in mm	Weight in kg
			Ø D	
DIN 32676 for pipes per DIN 11866 row A [1]	DN 10 ... 20	25	34.0	0.2
	DN 25 ... 40	25	50.5	0.3
	DN 50	16	64.0	0.4
DIN 32676 for pipes per DIN 11866 row B	13.5 ... 17.2	25	25.0	0.2
	21.3 ... 33.7	25	50.5	0.3
	42.4 ... 48.3	16	64.0	0.3
DIN 32676 for pipes per DIN 11866 row C	½" ... ¾"	25	25.0	0.2
	1" ... 1 ½"	25	50.5	0.3
	2"	16	64.0	0.4
TRI-CLAMP® per ASME BPE	½"	13.8	25.0	0.2
	¾"	13.8	25.0	0.2
	1"	13.8	50.5	0.3
	1 ½"	13.8	50.5	0.3
	2"	13.8	64.0	0.4
	2 ½"	13.8	77.5	0.4
	3"	13.8	91.0	0.5
	4"	13.8	119.0	0.5

1) Process connection identical in construction to ISO 2852

Dimensions for VARINLINE® process connection

Process connection	Nominal width in mm	PN in bar	Dimensions in mm				Weight in kg
			Ø D	Ø d	H	h	
Form B	DN 10, DN 15	25	31	52.7	20	13.65	0.3
Form F	DN 25, DN 32	25	50	66.0	18	12.30	0.4
Form N	DN 40, DN 50	25	68	84.0	18	12.30	0.6

NEUMO BioControl® process connection

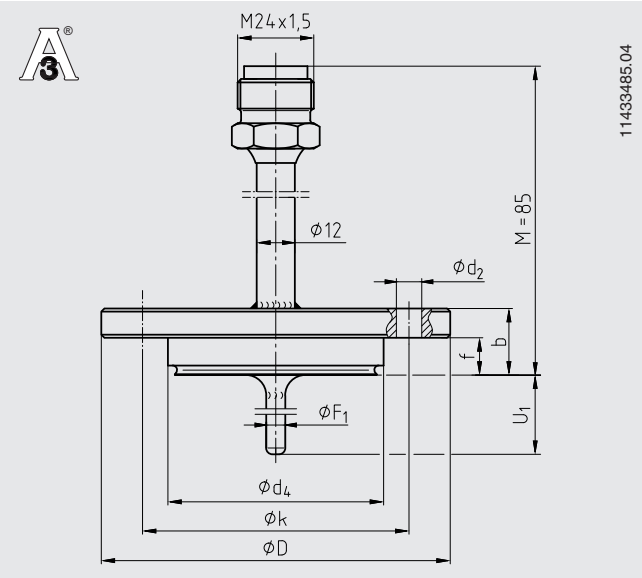

U_1 = variable insertion length

For fitting into a flow-through housing, the insertion length U_1 and the protection tube diameter must be matched. For angular housings, the insertion length U_1 must be specified by the customer.
The cases are not part of the scope of delivery of the resistance thermometers and can be ordered as a separate item. For a detailed description of the BioControl® cases, see data sheet AC 09.14.

Union nut process connection DIN 11851 with conical coupling (milk thread fitting)

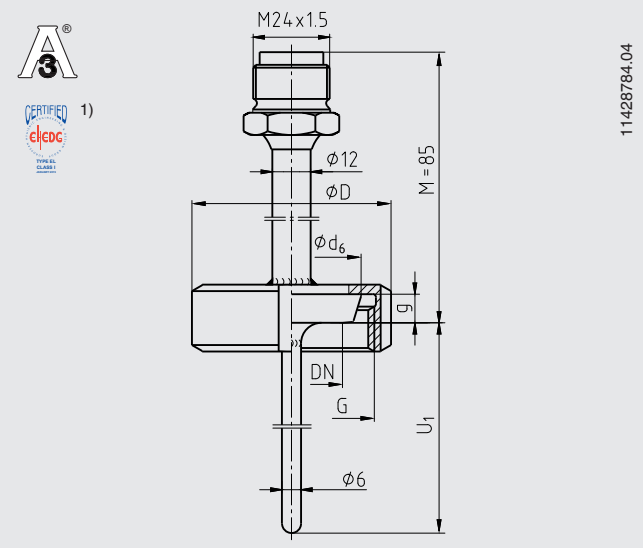

U_1 = variable insertion length

1) In combination with
- ASEPTO-STAR k-flex upgrade gaskets from Kieselmann GmbH, Germany or
- SKS gasket set DIN 11851 EHEDG from Siersema Komponenten

Dimensions for NEUMO BioControl® process connection

Case size	Nominal width of pipe	PN in bar	Dimensions in mm							Weight in kg
			U_1 2)	Ø d_4	Ø D	f	b	Ø k	Ø d_2	
Size 25	DN 8	16	5	30.5	64	11	20	50	4 x Ø 7	0.4
	DN 10	16	6	30.5	64	11	20	50	4 x Ø 7	0.4
	DN 15	16	9	30.5	64	11	20	50	4 x Ø 7	0.4
	DN 20	16	11	30.5	64	11	20	50	4 x Ø 7	0.4
Size 50	DN 25	16	15	50.0	90	17	27	70	4 x Ø 9	0.8
	DN 40	16	20	50.0	90	17	27	70	4 x Ø 9	0.8
	DN 50	16	25	50.0	90	17	27	70	4 x Ø 9	0.8
	DN 65	16	35	50.0	90	17	27	70	4 x Ø 9	0.8
	DN 80	16	45	50.0	90	17	27	70	4 x Ø 9	0.8
	DN 100	16	55	50.0	90	17	27	70	4 x Ø 9	0.8
Size 65	DN 40	16	20	68.0	120	17	27	95	4 x Ø 11	1.4
	DN 50	16	25	68.0	120	17	27	95	4 x Ø 11	1.4
	DN 65	16	35	68.0	120	17	27	95	4 x Ø 11	1.4
	DN 80	16	45	68.0	120	17	27	95	4 x Ø 11	1.4
	DN 100	16	55	68.0	120	17	27	95	4 x Ø 11	1.4

Dimensions for union nut process connection DIN 11851 with conical coupling (milk thread fitting)

Nominal width in mm	PN in bar	Dimensions in mm				Weight in kg
		Ø d_6	G	Ø D	g	
DN 20	40	36.5	RD 44 x 1/6	54	8	0.4
DN 25	40	44.0	RD 52 x 1/6	63	10	0.5
DN 32	40	50.0	RD 58 x 1/6	70	10	0.6
DN 40	40	56.0	RD 65 x 1/6	78	10	0.8
DN 50	25	68.5	RD 78 x 1/6	92	11	0.9

2) Recommended insertion length for installation in BioControl® flow-through housing; other insertion lengths are possible.

Process connection, aseptic threaded pipe connection DIN 11864-1 with form A liner, for pipes in accordance with DIN 11866 row A, B and C

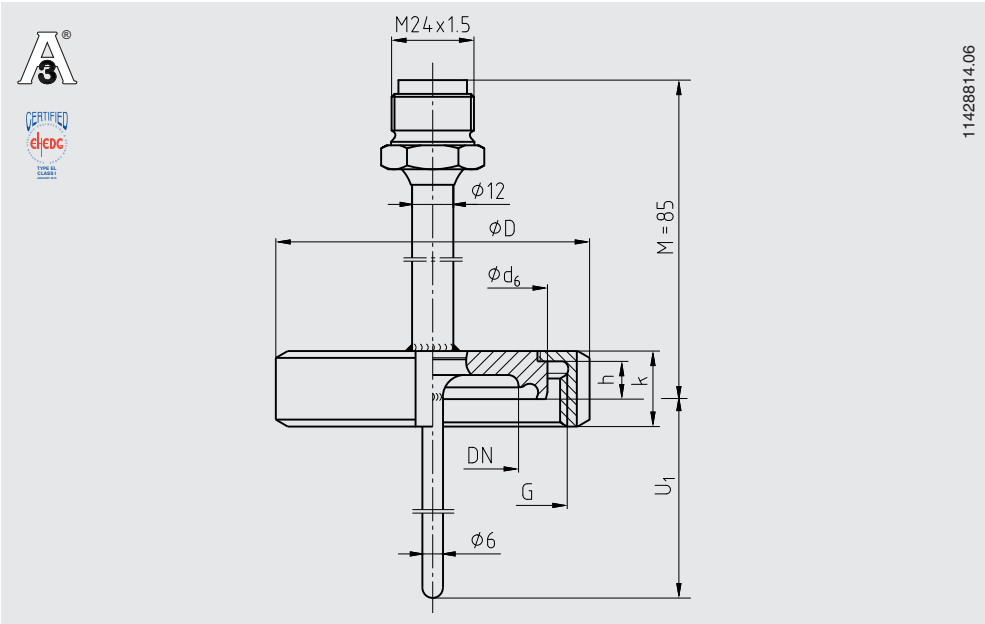

U_1 = variable insertion length

Nominal width of pipe	Nominal pressure in bar	Outer diameter of pipe	Pipe schedule	Inner diameter of pipe	Process connection				Aseptic O-ring	Weight in kg
DN / OD	PN		s		Ø D	G	h	k		
DIN 11866 row A or metric										
10	40	13	1.5	10	38	RD 28 x 1/8	9	18	12 x 3.5	0.2
15	40	19	1.5	16	44	RD 34 x 1/8	9	18	18 x 3.5	0.2
20	40	23	1.5	20	54	RD 44 x 1/6	10	20	22 x 3.5	0.25
25	40	29	1.5	26	63	RD 52 x 1/6	12	21	28 x 3.5	0.4
32	40	35	1.5	32	70	RD 58 x 1/6	13	21	34 x 5	0.45
40	40	41	1.5	38	78	RD 65 x 1/6	13	21	40 x 5	0.55
50	25	53	1.5	50	92	RD 78 x 1/6	14	22	52 x 5	0.7
DIN 11866 row B or ISO										
8 (13.5)	40	13.5	1.6	10.3	38	RD 28 x 1/8	9	18	12 x 3.5	0.2
10 (17.2)	40	17.2	1.6	14	44	RD 34 x 1/8	9	18	16 x 3.5	0.2
15 (21.3)	40	21.3	1.6	18.1	54	RD 44 x 1/6	10	20	20 x 3.5	0.3
20 (26.9)	40	26.9	1.6	23.7	63	RD 52 x 1/6	12	21	26 x 3.5	0.4
25 (33.7)	40	33.7	2	29.7	70	RD 58 x 1/6	13	21	32 x 5	0.5
32 (42.4)	25	42.4	2	38.4	78	RD 65 x 1/6	13	21	40.5 x 5	0.6
40 (48.3)	25	48.3	2	44.3	92	RD 78 x 1/6	14	22	46.6 x 5	0.7
DIN 11866 row C or ASME BPE										
1/2"	40	12.7	1.65	9.4	38	RD 28 x 1/8	9	18	12 x 3.5	0.2
3/4"	40	19.05	1.65	15.75	44	RD 34 x 1/8	9	18	18 x 3.5	0.2
1"	40	25.4	1.65	22.1	63	RD 52 x 1/6	12	21	24 x 3.5	0.4
1 1/2"	40	38.1	1.65	34.8	78	RD 65 x 1/6	13	21	37 x 5	0.6
2"	25	50.8	1.65	47.5	92	RD 78 x 1/6	14	22	50 x 5	0.7

Aseptic flange process connection DIN 11864-2, form A for pipes in accordance with DIN 11866 row A

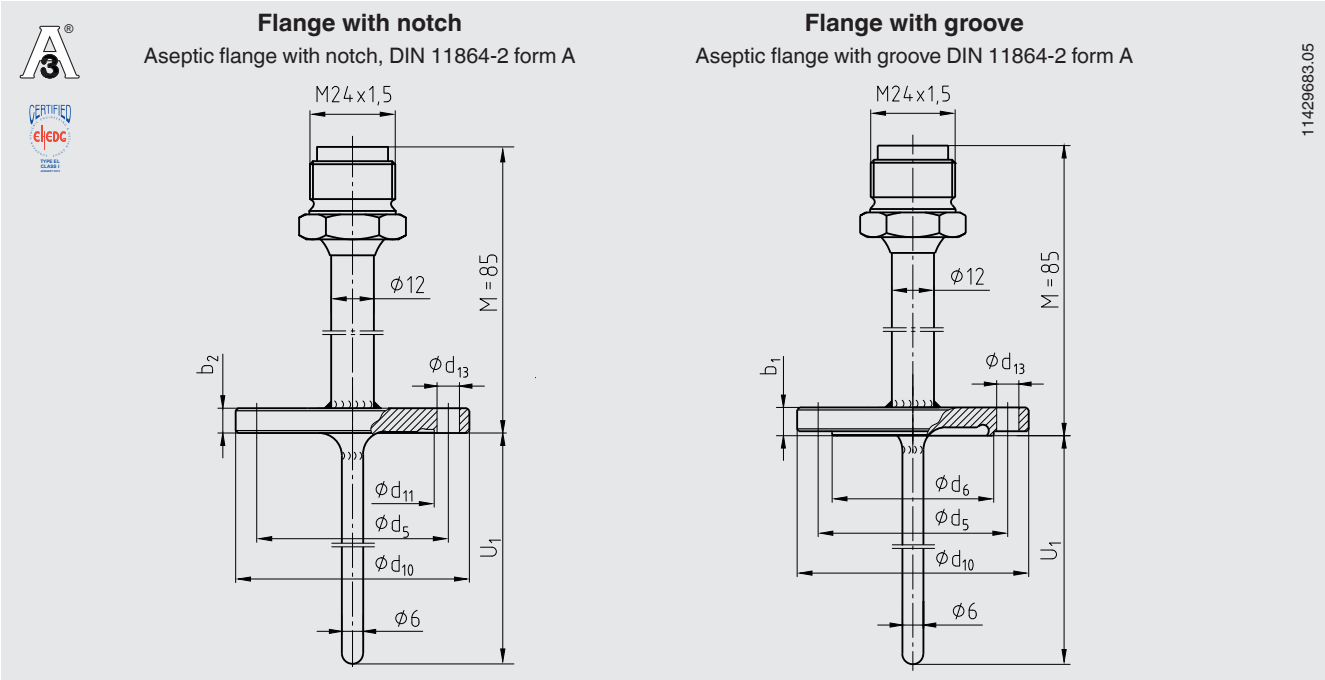

U_1 = variable insertion length

Process connection	Nominal width in mm	PN in bar	Dimensions in mm								Weight in kg
			b_1	b_2	Ø d_5	Ø d_6	Ø d_{10}	Ø d_{11}	Ø d_{13}	Aseptic O-ring	
Flange with notch	DN 10	25	-	10	37	-	54	22.4	4 x Ø 9	12 x 3.5	0.2
	DN 15	25	-	10	42	-	59	28.4	4 x Ø 9	18 x 3.5	0.25
	DN 20	25	-	10	47	-	64	32.4	4 x Ø 9	22 x 3.5	0.3
	DN 25	25	-	10	53	-	70	38.4	4 x Ø 9	28 x 3.5	0.1
	DN 32	25	-	10	59	-	76	47.7	4 x Ø 9	34 x 5	0.4
	DN 40	25	-	10	65	-	82	53.7	4 x Ø 9	40 x 5	0.5
	DN 50	16	-	10	77	-	94	65.7	4 x Ø 9	52 x 5	0.6
Flange with groove	DN 10	25	11.5	-	37	22.3	54	-	4 x Ø 9	12 x 3.5	0.25
	DN 15	25	11.5	-	42	28.3	59	-	4 x Ø 9	18 x 3.5	0.3
	DN 20	25	11.5	-	47	32.3	64	-	4 x Ø 9	22 x 3.5	0.3
	DN 25	25	11.5	-	53	38.3	70	-	4 x Ø 9	28 x 3.5	0.4
	DN 32	25	11.5	-	59	47.6	76	-	4 x Ø 9	34 x 5	0.45
	DN 40	25	11.5	-	65	56.6	82	-	4 x Ø 9	40 x 5	0.6
	DN 50	16	11.5	-	77	65.6	94	-	4 x Ø 9	52 x 5	0.7

Connections for pipes in accordance with DIN 11866 row B (ISO pipes) and row C (ASME pipes) available on request.

Aseptic clamp process connection, DIN 11864-3, form A for pipes in accordance with DIN 11866 row A

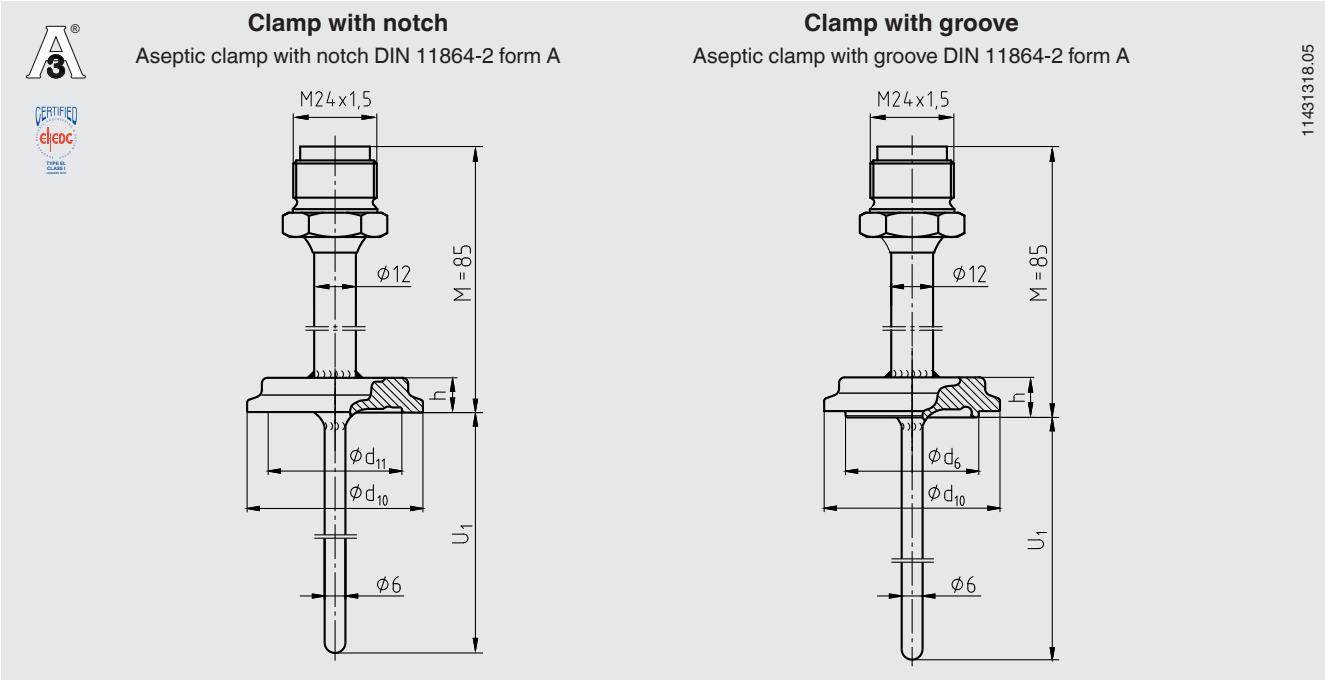

U_1 = variable insertion length

Process connection	Nominal width in mm	PN in bar	Dimensions in mm					Weight in kg
			Ø d_6	Ø d_{10}	Ø d_{11}	h	Aseptic O-ring	
Clamp with notch	DN 10	40	-	34	22.4	10	12 x 3.5	0.2
	DN 15	40	-	34	28.4	10	18 x 3.5	0.2
	DN 20	40	-	50.5	32.4	10	22 x 3.5	0.3
	DN 25	40	-	50.5	38.4	10	28 x 3.5	0.3
	DN 32	40	-	50.5	47.7	10	34 x 5	0.3
	DN 40	40	-	64	53.7	10	40 x 5	0.4
	DN 50	25	-	77.5	65.7	10	52 x 5	0.5
Clamp with groove	DN 10	40	22.3	34	-	11.5	12 x 3.5	0.2
	DN 15	40	28.3	34	-	11.5	18 x 3.5	0.2
	DN 20	40	32.3	50.5	-	11.5	22 x 3.5	0.3
	DN 25	40	38.3	50.5	-	11.5	28 x 3.5	0.3
	DN 32	40	47.6	50.5	-	11.5	34 x 5	0.3
	DN 40	40	53.6	64	-	11.5	40 x 5	0.4
	DN 50	25	65.6	77.5	-	11.5	52 x 5	0.5

Connections for pipes in accordance with DIN 11866 row B (ISO pipes) and row C (ASME pipes) available on request.

Union nut process connection SMS

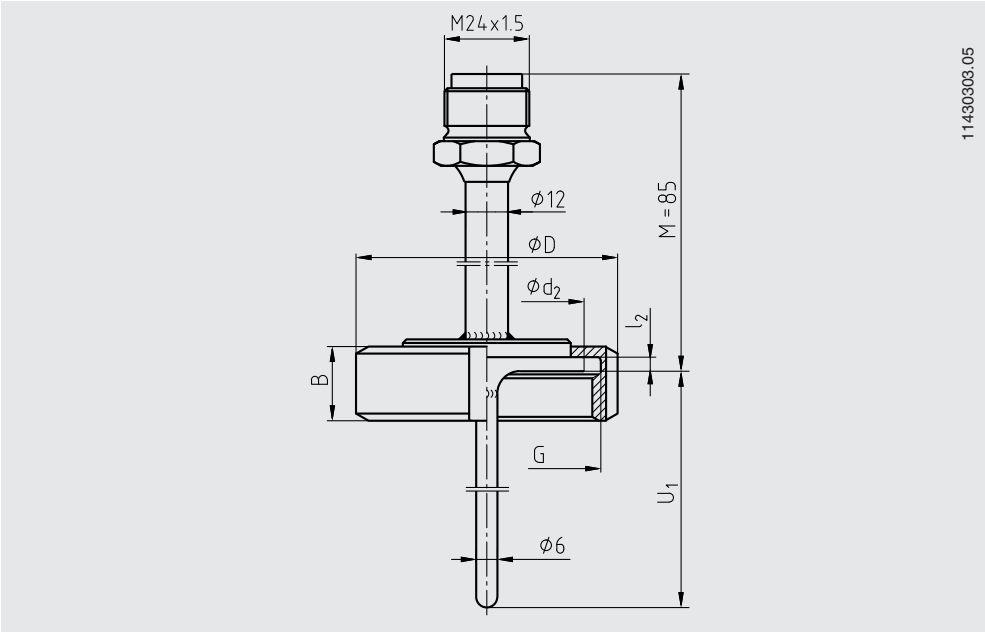

U_1 = variable insertion length

Nominal width in inch	PN in bar	Dimensions in mm					Weight in kg
		Ø D	Ø d_2	B	l_2	G	
1"	40	51	35.5	25	3.5	RD 40 x 1/6	0.4
1 ½"	40	74	55	25	4	RD 60 x 1/6	0.8
2"	40	84	65	26	4	RD 70 x 1/6	1.0

Process connection, straight, Ø 6 mm, basic shape for compression fitting

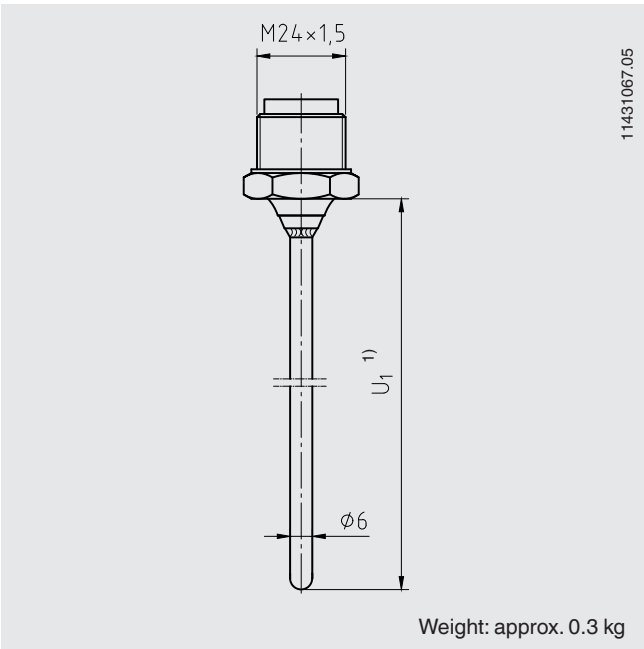

1) When using the optional wiper, the available insertion length is reduced by 12 mm.

Welding ball process connection

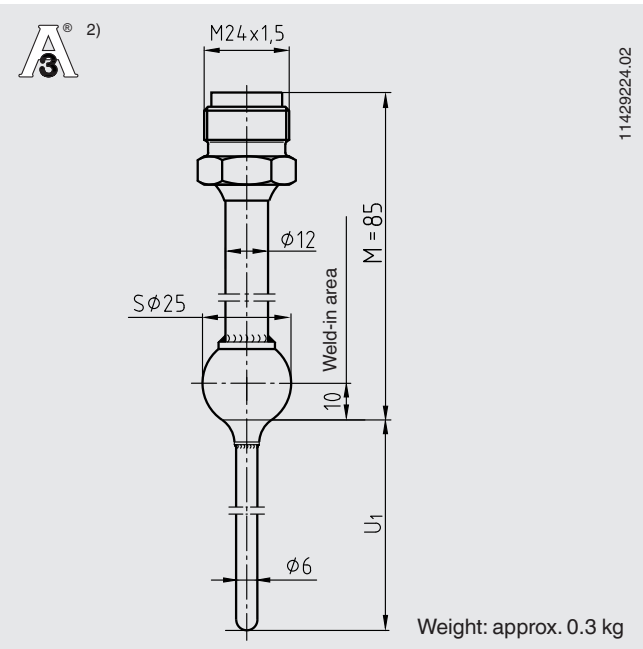

2) In order to meet the 3-A standard, the weld seam must be finished with a minimum radius of 3.2 mm on the product side. In this way, no weld defects, such as recesses or gaps, remain.

Compression fitting process connection

Ball-type compression fitting

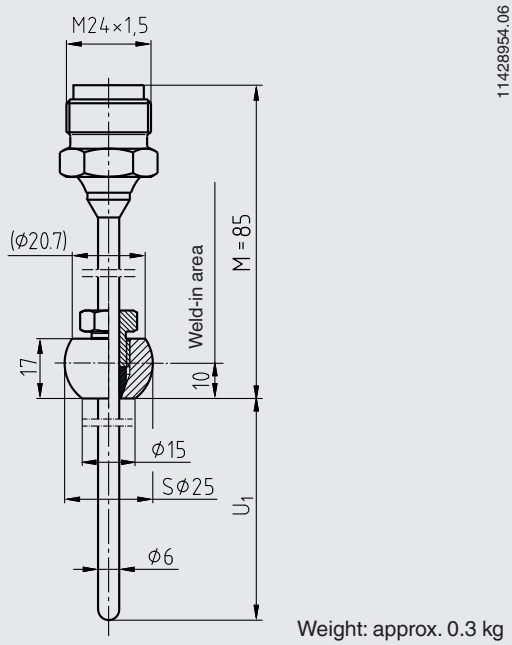

Weight: approx. 0.3 kg

Collar-type compression fitting

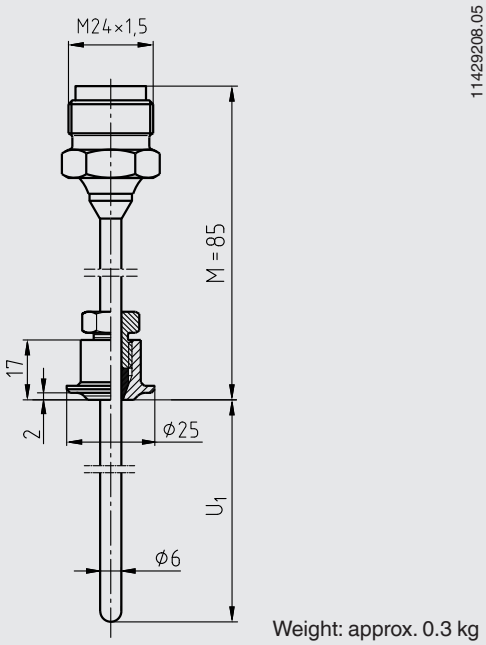

Weight: approx. 0.3 kg

Process connection, Ingold connection

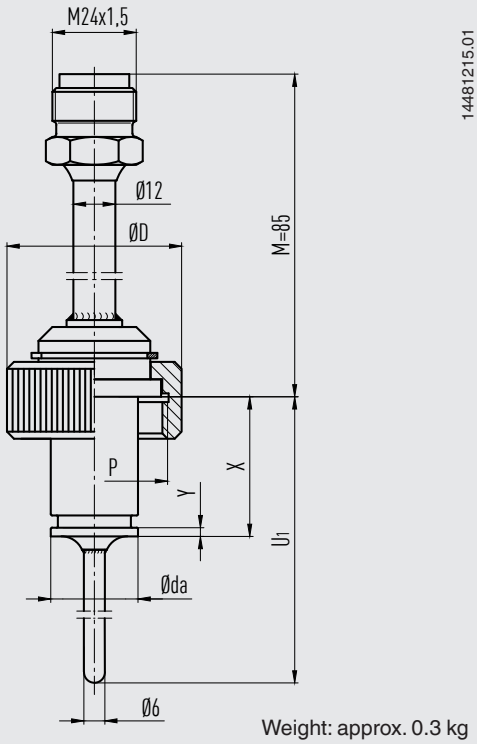

Weight: approx. 0.3 kg

Other process connections and nominal widths on request.

Ordering information

Model / Explosion protection / Sensor / Class accuracy / Connection head / Cable gland / Transmitter / Protection tube / Process connection / Protection tube diameter / Material of wetted parts / Insertion length U1 / Neck tube length / Certificates / Optional further sealing combinations

Standard articles

Configurator

© 02/2011 WIKA Alexander Wiegand SE & Co. KG, all rights reserved.
The specifications given in this document represent the state of engineering at the time of publishing.
We reserve the right to make modifications to the specifications and materials.

WIKA Alexander Wiegand SE & Co. KG
Alexander-Wiegand-Straße 30
63911 Klingenberg/Germany
Tel. +49 9372 132-0
info@wika.de
www.wika.de