Vibrating level switch
Hygienic design
Model TLS-H

For further approvals, see page 6

Standard articles

Applications

- General purpose vibrating level switch designed to suit all liquids
- Particularly suitable as overflow and dry run protection of pumps, vessels and pipelines
- Food, beverage and pharmaceutical industries

Special features

- Easy cleanability due to hygienic design
- Stable and reliable level detection without interference from flow, bubble formation, vibrations, build-up or solids in the medium
- Suitable for SIP and CIP

Fig. left: vibrating level switch, model TLS-HC
Fig. right: vibrating level switch, model TLS-HM

Description

The core element of the vibrating level switch is the tuning fork with integrated vibration drive. When the vibrating tuning fork is immersed in the medium, the resonance frequency of the tuning fork decreases. The frequency change is detected by the electronic circuit and is converted to a switching signal. Irrespective of the mounting position, level changes can be detected very accurately.

The model TLS-H vibrating level switch offers reliable and precise level detection. The instrument has been designed in accordance with the requirements of hygienic processes and enables easy cleaning and maintenance. The TLS-H in hygienic design can be used for CIP (cleaning in place) and SIP (sterilisation in place). It is available with two electrical outputs: TLS-HC with ASC4 connector and TLS-HM with M12 connector – for optimal adaptation to different system configurations.

In addition, the TLS-H is available with different surface roughnesses to meet the specific requirements of the respective application. A large number of hygienic process connections enables easy integration into food and pharmaceutical processes.

The vibrating level switches are, depending on the version, suitable for a process temperature of -40 ... +150 °C [-40 ... +302 °F] and an operating pressure of -1 ... +64 bar [-14 ... +928 psi]. The vibrating level switch is suitable for media with a density of 500 ... 2,500 g/cm^3 [289 ... 1,445 oz/in^3]. The viscosity of the media should be between 0.1 ... 10,000 cP [0.24 und 21,190 lb/ft·h].

Smart in sensing

Data sheet showing similar product:
Optoelectronic level switch; model OLS-2; see data sheet LM 31.07
Vibrating level switch, Ex version; models TLS-S; see data sheet LM 30.10
Vibrating level switch, compact version; models TLS-C; see data sheet LM 30.12

Application example

In practice, the WIKA vibrating level switches are mainly used in two areas: Firstly, the level switches are used to detect and control high and low levels in liquid vessels. Secondly, the vibrating level switches are used to detect liquids in pipelines to prevent the pump from running dry.

Level detection for vessels

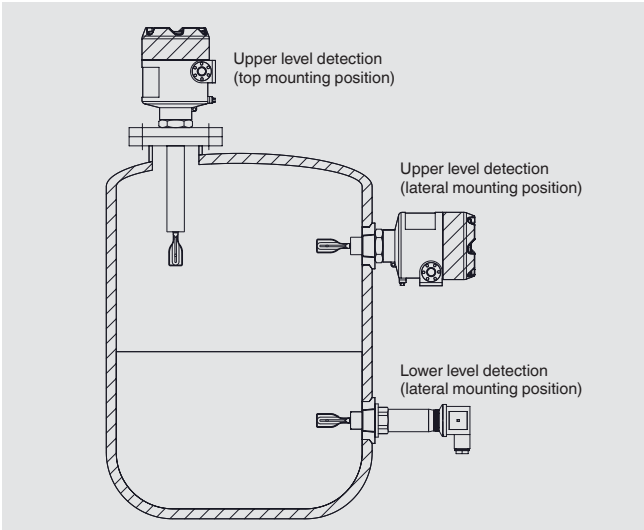

The vibrating level switch is usually installed on the side of the tank to detect the upper and lower liquid level. If the vessel has no side openings, the level switch can also be mounted on the tank from above. A pipe extension is then often used to achieve the desired switch point. Installation on the bottom of the tank is also possible.

Pipeline monitoring

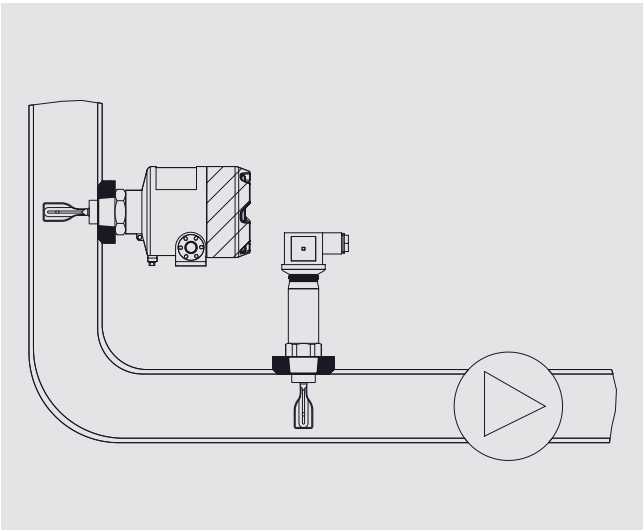

To ensure that a pump does not run dry, there must be sufficient liquid in the intake pipe. The vibrating level switch can detect this and thereby prevent damage to the pump. Since the tuning fork only protrudes 38 mm [1.5 in] into the pipeline, it can be used to measure in small diameter pipelines.

Overview of versions

Model	Description
TLS-HC	Vibrating level switch, hygienic design with angular connector DIN 175301
TLS-HM	Vibrating level switch, hygienic design with circular connector M12 x 1

Vibrating level switch TLS-HC
Hygienic design with angular connector DIN 175301

	Mounting thread	Mounting thread with extension	Clamp connection	Clamp connection with extension
① Connector ② Direction mark ③ Switch point ④ Insertion length ⑤ Extension	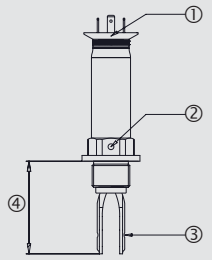	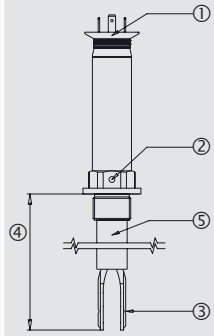	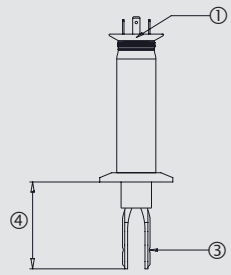	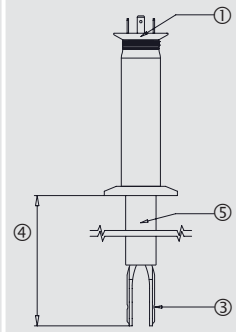
Electrical connection	■ 4-pin per DIN EN 175301-803 ■ M16 x 1.5			
Process connection	■ G ¾ ... 2 ■ ¾ ... 2 NPT		■ 1" ... 4" per ASME BPE ■ DN 25 ... DN 100 per DIN 32676 row A ■ DN 1 ... DN 4 per DIN 32676 row C	
Material				
Connection housing	Stainless steel 1.4404 (316L)			
Process connection	Stainless steel 1.4404 (316L)			
Tuning fork (wetted)	■ Stainless steel 1.4404 (316L) ■ Stainless steel 1.4404, 1.4435 (316L), electropolished ■ Hastelloy C-276 ■ Hastelloy C-276, electropolished			
Ambient temperature	-40 ... +60 °C [-40 ... +140 °F]			
Supply voltage	DC 24 V			
Process temperature	-40 ... +100 °C [-40 ... +212 °F]	-40 ... +150 °C [-40 ... +302 °F]	-40 ... +100 °C [-40 ... +212 °F]	-40 ... +150 °C [-40 ... +302 °F]
Hygienic cleaning processes	Suitable for CIP (cleaning in place)	■ Suitable for CIP (cleaning in place) ■ Suitable for SIP (sterilisation in place)	Suitable for CIP (cleaning in place)	■ Suitable for CIP (cleaning in place) ■ Suitable for SIP (sterilisation in place)
Density of the medium	≥ 500 ... 2,500 kg/m³			
Operating pressure	-1 ... +64 bar [-14.5 ... +928 psi]			
Switching output	■ SPST relay output ■ PNP transistor output			
Power consumption	< 1 W			
Max. switching power (relay output)	DC 30 V / 3 A			
IP ingress protection	IP65			
Insertion length	64 mm [2.52 in]	64 ... 3,000 mm [2.52 ... 118.11 in]	■ 60 mm [2.36 in] ■ 43 mm [1.69 in] ■ 47 mm [1.85 in]	60 ... 3,000 mm [2.36 ... 118.11 in]
Switch point	Switch point = insertion length - 13 mm [0.51 in]			
Surface finish quality (wetted)	■ Ra ≤ 0.76 µm (SF3 per ASME BPE) ■ Ra ≤ 0.38 µm (SF4 per ASME BPE) ■ Ra ≤ 0.38 µm electropolished (SF4 per ASME BPE)			
Tuning fork length	■ 42 mm [1.65 in] ■ 38 mm [1.50 in]			

Vibrating level switch TLS-HM
Hygienic design with circular connector M12 x 1

	Mounting thread	Mounting thread with extension	Clamp connection	Clamp connection with extension
① Connector ② Direction mark ③ Switch point ④ Insertion length ⑤ Extension	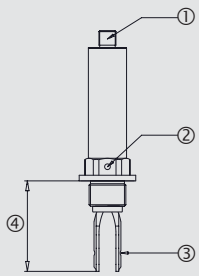	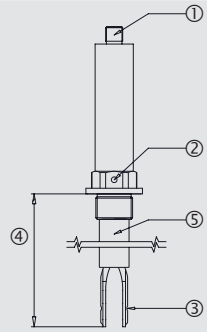	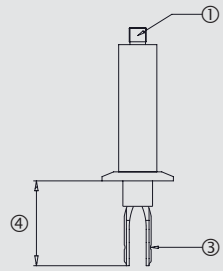	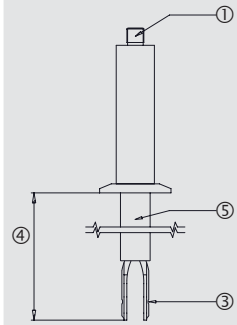
Electrical connection	M12 coupler connector, 4-pin			
Process connection	■ G ¾ ... 2 ■ ¾ ... 2 NPT		■ 1" ... 4" per ASME BPE ■ DN 25 ... DN 100 per DIN 32676 row A ■ DN 1 ... DN 4 per DIN 32676 row C	
Material				
Connection housing	Stainless steel 1.4404 (316L)			
Process connection	Stainless steel 1.4404 (316L)			
Tuning fork (wetted)	■ Stainless steel 1.4404 (316L) ■ Stainless steel 1.4404, 1.4435 (316L), electropolished ■ Hastelloy C-276 ■ Hastelloy C-276, electropolished			
Ambient temperature	-40 ... +60 °C [-40 ... +140 °F]			
Supply voltage	DC 24 V			
Process temperature	-40 ... +100 °C [-40 ... +212 °F]	-40 ... +150 °C [-40 ... +302 °F]	-40 ... +100 °C [-40 ... +212 °F]	-40 ... +150 °C [-40 ... +302 °F]
Hygienic cleaning processes	Suitable for CIP (cleaning in place)	■ Suitable for CIP (cleaning in place) ■ Suitable for SIP (sterilisation in place)	Suitable for CIP (cleaning in place)	■ Suitable for CIP (cleaning in place) ■ Suitable for SIP (sterilisation in place)
Density of the medium	≥ 500 ... 2,500 kg/m³			
Operating pressure	-1 ... +64 bar [-14.5 ... +928 psi]			
Switching output	■ SPST relay output ■ PNP transistor output			
Power consumption	< 1 W			
Max. switching power (relay output)	DC 30 V / 3 A			
IP ingress protection	IP66/68			
Insertion length	64 mm [2.52 in]	64 ... 3,000 mm [2.52 ... 118.11 in]	■ 60 mm [2.36 in] ■ 47 mm [1.85 in]	60 ... 3,000 mm [2.36 ... 118.11 in]
Switch point	Switch point = insertion length - 13 mm [0.51 in]			
Surface finish quality (wetted)	■ Ra ≤ 0.76 µm (SF3 per ASME BPE) ■ Ra ≤ 0.38 µm (SF4 per ASME BPE) ■ Ra ≤ 0.38 µm electropolished (SF4 per ASME BPE)			
Tuning fork length	■ 42 mm [1.65 in] ■ 38 mm [1.50 in]			

EHEDG-certified process connections

Hygienic process connection	Size DN	EHEDG approval
Clamp DIN 32676	25 ... 100	Yes
Clamp ISO 2852	25 ... 101.6	Yes
Clamp ASME BPE	1“ ... 4“	Yes
DIN 11851	25 ... 100	Yes
DIN 11864-1 Form A	25 ... 100	Yes
DIN 11864-2 Form A	25 ... 100	Yes
DIN 11864-3 Form A	25 ... 100	Yes
VARILINE® Form F, Form N	25 ... 100	Yes

Wiring scheme

→ For details on the wiring scheme, see the model TLS installation and operating instructions

TLS-HC

4-pin coupler connector per DIN EN 175301-803, with electrical connection M16 x 1.5

PNP transistor output
Supply voltage DC 24 V
High alarm

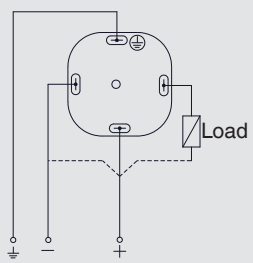

PNP transistor output
Supply voltage DC 24 V
Low alarm

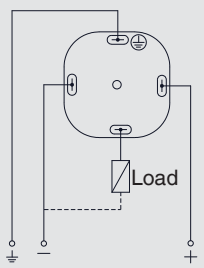

SPST relay output
Supply voltage DC 24 V

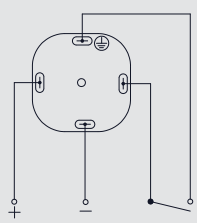

TLS-HM

Circular connector M12 x 1, 4-pin

PNP transistor output
Supply voltage DC 24 V
High alarm

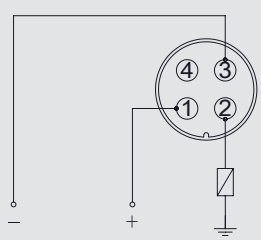

PNP transistor output
Supply voltage DC 24 V
Low alarm

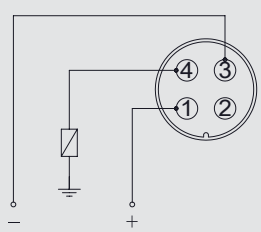

SPST relay output
Supply voltage DC 24 V

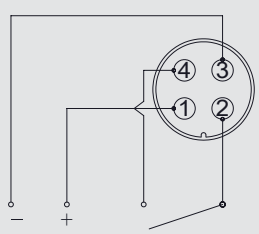

Approvals

Logo	Description	Region
CE	**EU declaration of conformity**	European Union
	EMC directive EN 61326 emission (group 1, class B) and immunity (industrial environments)	
	RoHS directive	
UK CA	**UKCA**	United Kingdom
	Electromagnetic compatibility regulations	
	Restriction of hazardous substances (RoHS) regulations	
	EHEDG Hygienic design Type EL, Class 1	European Union

Manufacturer's declaration

Logo	Description
-	Manufacturer's declaration regarding regulation (EC) no. 1935/2004; good manufacturing practice (EC) no. 2023/2006 (GMP)
-	Manufacturer's declaration GB 4806.1-2016 China National Food Safety Standard – good manufacturing practice GB 31603-2015 (GMP)

Certificates

Certificates	
Certificates	■ 2.2 test report per EN 10204 (e.g. state-of-the-art manufacturing, material proof, wetted metal parts free from substances of animal origin (ADI-free)) ■ 3.1 inspection certificate per EN 10204 (e.g. material proof for wetted metal parts)

Accessories

Description		Temperature range	Cable Ø	Order no.
M12 connector with moulded cable				
	Straight version, cut to length, 4-pin, 2 m [6.6 ft], PUR cable, UL Listed, IP67	-20 ... +80 °C [-4 ... +176 °F]	4.5 mm [0.18 in]	14086880
	Straight version, cut to length, 4-pin, 5 m [16.4 ft], PUR cable, UL Listed, IP67			14086883
	Straight version, cut to length, 4-pin, 10 m [32.8 ft], PUR cable, UL Listed, IP67			14086884
	Angled version, cut to length, 4-pin, 2 m [6.6 ft], PUR cable, UL Listed, IP67	-20 ... +80 °C [-4 ... +176 °F]	4.5 mm [0.18 in]	14086889
	Angled version, cut to length, 4-pin, 5 m [16.4 ft], PUR cable, UL Listed, IP67			14086891
	Angled version, cut to length, 4-pin, 10 m [32.8 ft], PUR cable, UL Listed, IP67			14086892

Description		Temperature range	Cable length	Order no.
Connection cable M12 x 1 with integrated LED display				
	Connection cable, 4-pin, PUR cable, UL Listed, IP67 1x LED green, 2x LED yellow	-20 ... +80 °C [-4 ... +176 °F]	2 m [6.6 ft]	14252834
	Connection cable, 4-pin, PUR cable, UL Listed, IP67 1x LED green, 2x LED yellow	-20 ... +80 °C [-4 ... +176 °F]	5 m [16.4 ft]	14252835

Dimensions in mm [in]

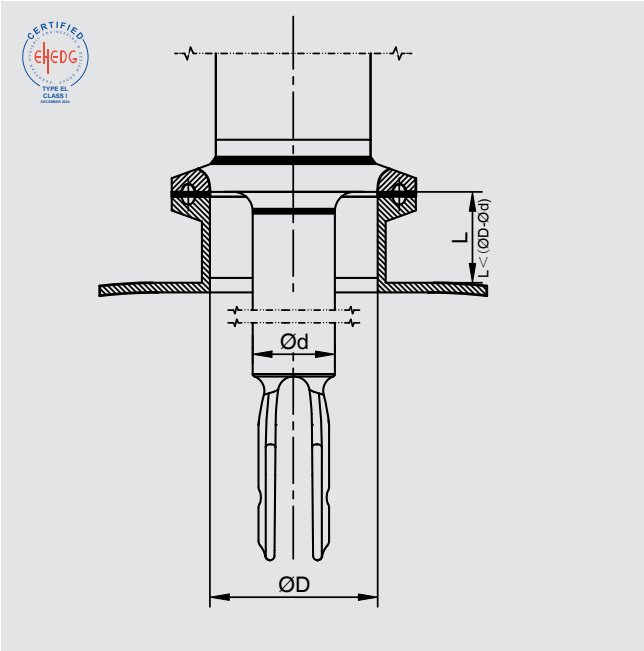

Sensors inserted in tanks should be flush with the inside of the tank wall. If, for technical reasons, there is a dead space, it must be ensured that the spray jet from the cleaning appliance can reach all surfaces. To fulfil the EHEDG cleaning criteria, the maximum length of the tank nozzle, L_{max}, should be taken into account.

Standard	DN	ØD	L_{max} (ØD - Ød) Ød = 17	L_{max} (ØD - Ød) Ød = 21,3
Clamp DIN 32676	25	26	9	-
	32	32	15	10.7
	40	38	21	16.7
	50	50	33	28.3
	65	66	39	44.7
	80	81	54	59.7
	100	100	83	78.7
Clamp ISO 2852	25	22.6	5.6	-
	33.7	31.3	14.3	10
	38	35.6	18.6	14.3
	40	37.6	20.6	16.3
	51	48.6	31.6	27.3
	63.5	60.3	43.3	40
	70	66.8	49.8	45.5
	76.1	72.9	55.9	51.6
	88.9	84.9	67.9	63.6
	101.6	97.6	80.6	76.3
Clamp ASME BPE	1"	22.1	5.1	-
	1,5"	34.8	17.8	13.5
	2"	47.5	30.5	26.2
	2,5"	60.2	33.2	38.9
	3"	72.9	55.9	51.6
	4"	97.38	80.38	76.08

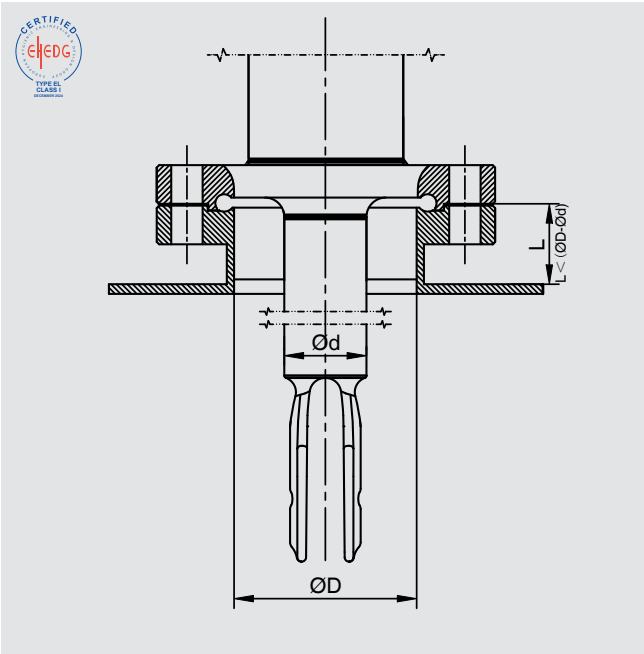

Standard	DN	ØD	L_{max} (ØD - Ød) Ød = 17	L_{max} (ØD - Ød) Ød = 21,3
DIN 11851	25	26	9	-
	32	32	15	10.7
	40	38	21	16.7
	50	50	33	28.7
	65	66	39	44.7
	80	81	54	59.7
	100	100	83	78.7
DIN 11864-1 Form A	25	26	9	-
	32	32	15	10.7
	40	38	21	16.7
	50	50	33	28.7
	65	66	39	44.7
	80	81	54	59.7
	100	100	83	78.7
DIN 11864-2 Form A	25	26	9	-
	32	32	15	10.7
	40	38	21	16.7
	50	50	33	28.7
	65	66	39	44.7
	80	81	54	59.7
	100	100	83	78.7
DIN 11864-3 Form A	25	26	9	-
	32	32	15	10.7
	40	38	21	16.7
	50	50	33	28.7
	65	66	39	44.7
	80	81	54	59.7
	100	100	83	78.7

Ordering information

Model / Operating pressure / Operating temperature / Material / Electrical connection / Process connection (standard and size) / Surface finish quality / Tuning fork length / Switching output / Insertion length / Manufacturer's declaration / Certificates

To order the described product the order number is sufficient.

Standard articles

© 01/2025 WIKA Alexander Wiegand SE & Co. KG, all rights reserved.
The specifications given in this document represent the state of engineering at the time of publishing.
We reserve the right to make modifications to the specifications and materials.
In case of a different interpretation of the translated and the English data sheet, the English wording shall prevail.

WIKA Alexander Wiegand SE & Co. KG
Alexander-Wiegand-Straße 30
63911 Klingenberg/Germany
Tel. +49 9372 132-0
info@wika.de
www.wika.de