# Bypass level indicator
# With magnetic display
# Model BNA



for further approvals
see page 4

## Applications

- Continuous level indication without supply voltage
- Indication of the level proportional to height
- Individual design and corrosion-resistant materials make the products suitable for a broad range of applications
- Chemical industry, petrochemical industry, oil and natural gas extraction (on- and offshore), shipbuilding, machine building, power generating equipment, power plants
- Process water and drinking water treatment, food and beverage industry, pharmaceutical industry

## Special features

- Process- and procedure-specific production
- Operating limits:
  - Operating temperature: T = -196 ... +450 °C
  - Operating pressure: P = Vacuum to 400 bar
  - Limit density: $\rho \geq 340$ kg/m³
- Wide variety of different process connections and materials
- Mounting of level transmitters and magnetic switches possible as an option
- Explosion-protected versions

**Bypass level indicator, model BNA with level sensor and magnetic switch**

## Description

The model BNA bypass level indicator consists of a bypass chamber which is attached to the side of a tank as a communicating vessel via at least 2 process connections (flange, threaded coupling or weld stub). Through this type of arrangement, the level in the bypass chamber corresponds to the level in the vessel. The float with a built-in permanent magnetic system, which is mounted within the bypass chamber, transmits the liquid level, contact-free, to the magnetic display mounted to the outside of the bypass chamber. In this are fitted, at 10 mm intervals, two-coloured plastic rollers or stainless steel flaps with bar magnets.

Through the magnetic field of the permanent magnetic system in the float, the display elements, through the wall of the bypass chamber, are turned through 180°. For an increasing level from white to red; for a falling level from red to white. Thus the bypass level indicator clearly displays the level of a vessel without supply voltage.



Smart in sensing

Data sheets showing similar products and accessories:
Float; model BFT; see data sheet LM 10.02
Magnetic display; model BMD; see data sheet LM 10.03
Reed level transmitter; model BLR; see data sheet LM 10.04
Magnetostrictive level transmitter; model BLM; see data sheet LM 10.05
Magnetic switch; model BGU; see data sheet LM 10.06

## Further special features

- Simple, robust and solid design, long service life
- Bypass chamber and float from stainless steel 1.4571, 1.4404 or special materials
- Pressure- and gas-tight separation between measuring and display chamber
- Detecting and indicating of the fill level of aggressive, combustible, toxic, hot and highly contaminated media
- The functioning of the magnetic display is guaranteed even in the event of power failures
- Applicable for all industrial applications by using various corrosion-resistant materials
- Continuous detection of levels, independent of physical and chemical changes of the media such as: Foaming, conductivity, dielectric, pressure, vacuum, temperature, vapours, condensation, bubble formation, boiling effects
- Interface-layer level measurement from Δ density 100 kg/m³
- Special versions: Food-compliant, coatings, liquid gas, heating jacket

## Design and operating principle

- In a communicating bypass chamber mounted to the side of a vessel a float moves with the level of the medium to be measured.
- The magnetic field of the radial-symmetric magnetic system positioned in the float activates the magnetic display attached to the outside of the bypass chamber as well as the switching and measuring elements.

## Magnetic system

The magnetic system is assembled from a pole disc and various magnets. These can be individually adapted to the different chamber dimensions and for temperatures up to 450 °C.

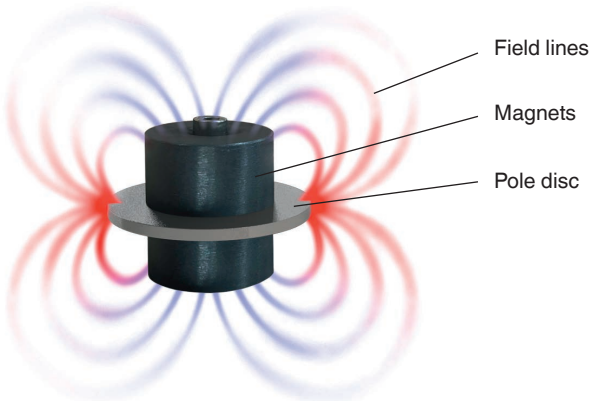


## Illustration of the principle

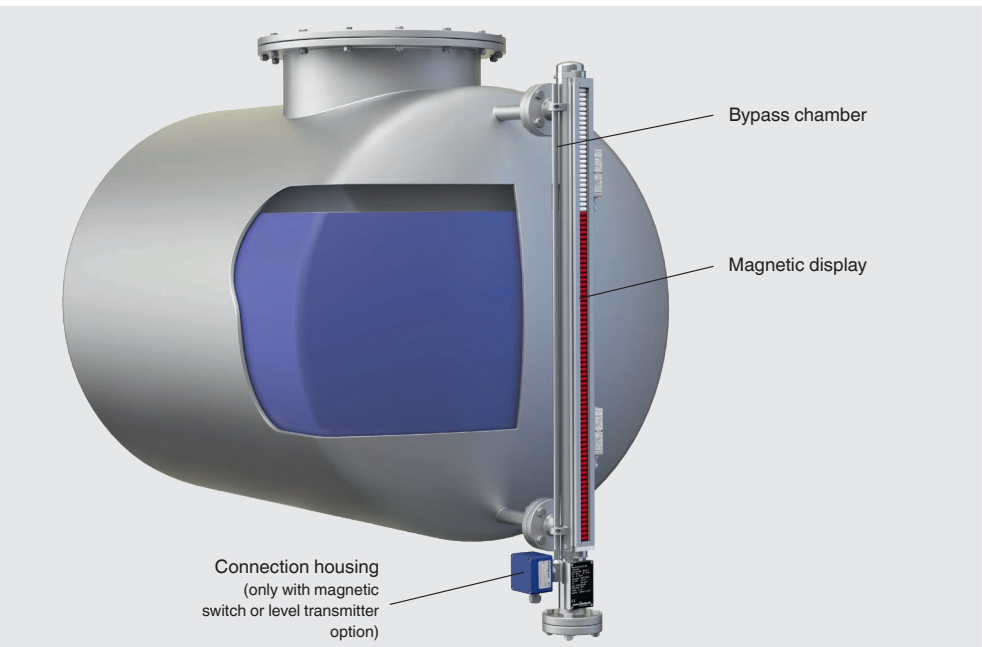

## Model overview

| Model | Description | Materials | Max. operating pressure in bar | Max. operating temperature in °C |
|---|---|---|---|---|
| **BNA-S** | Standard version | ■ Stainless steel 1.4571 (316Ti)<br>■ Stainless steel 1.4401/1.4404 (316/316L) | 100 | -196 ... +450 |
| **BNA-C** | Compact version | Stainless steel 1.4571 (316Ti) | 40 | -196 ... +200 |
| **BNA-P** | Plastic version | ■ PP<br>■ PVDF | 6 | -10 ... +100 |
| **BNA-H** | High-pressure version | ■ Stainless steel 1.4571 (316Ti)<br>■ Stainless steel 1.4401/1.4404 (316/316L) | 385 | -196 ... +450 |
| **BNA-SD** | DUPlus version, standard | ■ Stainless steel 1.4571 (316Ti)<br>■ Stainless steel 1.4401/1.4404 (316/316L) | 100 | -196 ... +450 |
| **BNA-HD** | DUPlus version, high pressure | ■ Stainless steel 1.4571 (316Ti)<br>■ Stainless steel 1.4401/1.4404 (316/316L) | 160 | -196 ... +450 |
| **BNA-L** | Liquid gas/KOPlus version | ■ Stainless steel 1.4571 (316Ti)<br>■ Stainless steel 1.4401/1.4404 (316/316L) | 63 | -196 ... +450 |
| **BNA-X** | Special materials | Stainless steel 6Mo 1.4547 (UNS S31254) | 250 | -196 ... +450 |
| | | ■ Stainless steel 1.4571 (316Ti) with internal coating E-CTFE<br>■ Stainless steel 1.4571 (316Ti) with internal coating PTFE | 16 | Depending on medium |
| | | Titanium 3.7035 | 40 | -10 ... +450 |
| | | Hastelloy C276 (2.4819) | 160 | -196 ... +450 |
| **BNA-J** | Heating jacket version | ■ Stainless steel 1.4571 (316Ti)<br>■ Stainless steel 1.4401/1.4404 (316/316L) | 64 | -60 ... +450 |

Other materials on request

Note: Always consider the operating pressure and temperature together.

**Design codes available**
- AD2000
- ASME B31.3
- EN 13445
- NORSOK

## CE classification

| Model | PED | ATEX | CE |
|---|---|---|---|
| **BNA-.00** | - | - | - |
| **BNA-.A1**<br>**BNA-.A2**<br>**BNA.-BD**<br>**BNA-.GE**<br>**BNA-.BC** | x | - | x |
| **BNA-.00C** | - | x | x |
| **BNA-.A1C**<br>**BNA-.A2C**<br>**BNA.-BDC**<br>**BNA-.GEC**<br>**BNA-.BCC** | x | x | x |

## Approvals

### Model BNA-P

| Logo | Description | Country |
|---|---|---|
| | **EU declaration of conformity**<br>Pressure equipment directive | European Union |
| | **GOST (option)**<br>Metrology [1], measurement technology | Russia |

### Models BNA-S, BNA-C, BNA-H

| Logo | Description | Country |
|---|---|---|
| | **EU declaration of conformity**<br>■ Pressure equipment directive<br>■ ATEX directive (option)<br>Hazardous areas<br>- Ex h Zone 0/1, gas [2] II 1/2G Ex h IIB T6 ... T1 Ga/Gb<br>Zone 0/1, gas [2] II 1/2G Ex h IIC T6 ... T1 Ga/Gb<br>Zone 2, gas II 3/3G Ex h IIC T6 ... T1 Gc/Gc<br>Zone 0/1, dust [2] II -/2D Ex h IIIC T68 ... T360°C -/Db<br>Zone 0/1, dust [2] II -/2D Ex h IIIC T68 ... T360°C -/Db<br>Zone 2, dust II -/3D Ex h IIIC T80 ... T440°C -/Dc | European Union |
| | **IECEx (option)**<br>Hazardous areas<br>- Ex h Zone 0/1, gas [2] II 1/2G Ex h IIB T6 ... T1 Ga/Gb X<br>Zone 0/1, gas [2] II 1/2G Ex h IIC T6 ... T1 Ga/Gb X<br>Zone 2, gas II 3/3G Ex h IIC T6 ... T1 Gc/Gc X<br>Zone 0/1, dust [2] II -/2D Ex h IIIC T68 ... T360°C -/Db X<br>Zone 0/1, dust [2] II -/2D Ex h IIIC T68 ... T360°C -/Db X<br>Zone 2, dust II -/3D Ex h IIIC T80 ... T440°C -/Dc X | International |
| | **GOST (option)**<br>Metrology [1], measurement technology | Russia |
| | **DNV GL (option)**<br>■ Ships, shipbuilding (e.g. offshore)<br>■ Hazardous areas<br>- Ex c Zone 0/1, gas II 1/2 G c T1 ... T6 | International |
| | **ABS (option)**<br>Ships, shipbuilding (e.g. offshore) | International |

### Models BNA-SD, BNA-HD, BNA-L

| Logo | Description | Country |
|---|---|---|
| | **EU declaration of conformity**<br>■ Pressure equipment directive<br>■ ATEX directive (option)<br>Hazardous areas<br>- Ex h Zone 0/1, gas II 1/2 G c T1 ... T6<br>Zone 0/1, gas [2] II 1/2G Ex h IIB T6 ... T1 Ga/Gb<br>Zone 2, gas II 3/3G Ex h IIC T6 ... T1 Gc/Gc<br>Zone 0/1, dust [2] II -/2D Ex h IIIC T68 ... T360°C C-/Db<br>Zone 2, dust II -/3D Ex h IIC T80 ... T440°C -/Dc | European Union |
| | **IECEx (option)**<br>Hazardous areas<br>- Ex h Zone 0/1, gas G c T1 ... T6<br>Zone 0/1, gas [2] Ex h IIB T6 ... T1 Ga/Gb<br>Zone 2, gas Ex h IIC T6 ... T1 Gc/Gc<br>Zone 0/1, dust [2] Ex h IIIC T68 ... T360°C C-/Db<br>Zone 2, dust Ex h IIC T80 ... T440°C -/Dc | International |
| | **GOST (option)**<br>Metrology [1], measurement technology | Russia |

## Models BNA-X, BNA-J

| Logo | Description | Country |
|---|---|---|
| CE<br>Ex | **EU declaration of conformity**<br>■ Pressure equipment directive<br>■ ATEX directive (option)<br>Hazardous areas<br>- Ex h Zone 0/1, gas II 1/2 G c T1 ... T6<br>Zone 0/1, gas [2] II 1/2G Ex h IIB T6 ... T1 Ga/Gb<br>Zone 2, gas II 3/3G Ex h IIC T6 ... T1 Gc/Gc<br>Zone 0/1, dust [2] II -/2D Ex h IIIC T68 ... T360°C C-/Db<br>Zone 2, dust II -/3D Ex h IIC T80 ... T440°C -/Dc | European Union |
| IEC IECEx | **IECEx (option)**<br>Hazardous areas<br>- Ex h Zone 0/1, gas G c T1 ... T6<br>Zone 0/1, gas [2] Ex h IIB T6 ... T1 Ga/Gb<br>Zone 2, gas Ex h IIC T6 ... T1 Gc/Gc<br>Zone 0/1, dust [2] Ex h IIIC T68 ... T360°C C-/Db<br>Zone 2, dust Ex h IIC T80 ... T440°C -/Dc | International |
| | **GOST (option)**<br>Metrology [1], measurement technology | Russia |
| DNV | **DNV GL (option) - not for version with internal coating**<br>■ Ships, shipbuilding (e.g. offshore)<br>■ Hazardous areas<br>- Ex c Zone 0/1, gas II 1/2 G c T1 ... T6 | International |

1) Only in combination with electrical components
2) With plastic cover on the display bar

Other approvals on request.
Approvals and certificates, see website

## Standard version, model BNA-S

Bypass chamber from stainless steel

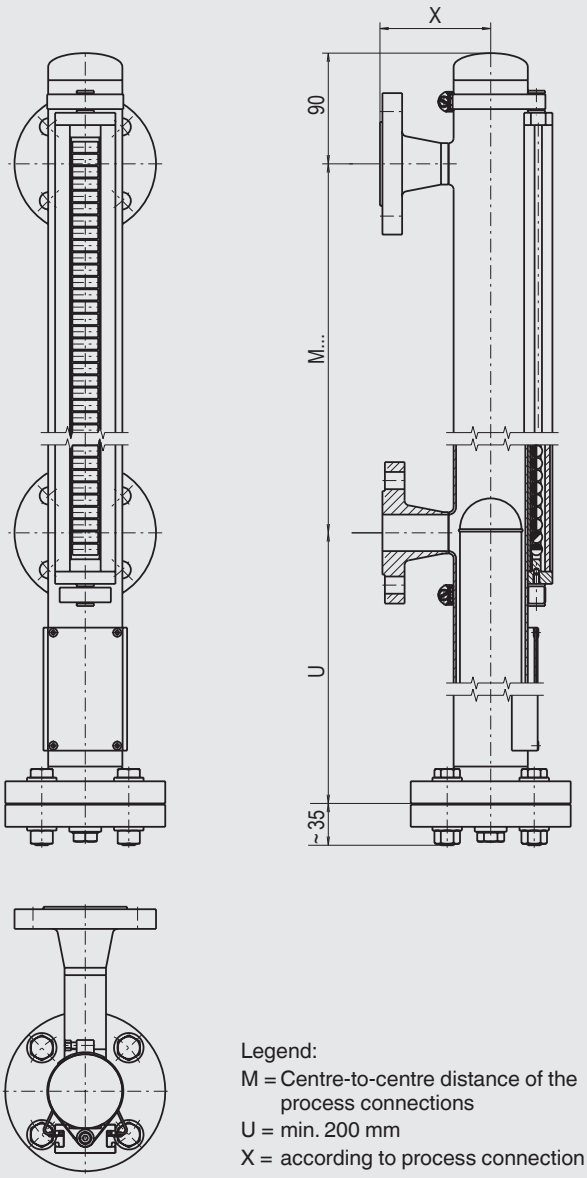


Legend:
M = Centre-to-centre distance of the process connections
U = min. 200 mm
X = according to process connection

| Specifications | |
|---|---|
| **Bypass chamber** | Ø 60.3 x 2 mm, max. 63 bar<br>Ø 60.3 x 2.77 mm, max. 100 bar |
| **Chamber end top** | Pipe cap or flange connection<br>■ Vent screw<br>■ Vent valve<br>■ Vent flange<br>→ Options see page 17 |
| **Chamber end bottom** | Flange connection<br>■ Drain plug<br>■ Drain valve<br>■ Drain flange<br>→ Options see page 17 |
| **Process connections** | 2 x lateral (options see page 18) |
| Mounting flange | ■ EN 1092-1, DN 10 ... DN 100, PN 6 ... PN 100<br>■ DIN, DN 10 ... DN 100, PN 6 ... PN 100<br>■ Flange ANSI B 16.5, 1/2" ... 4", class 150 ... class 900 |
| Weld stub | 1/2" ... 1" |
| Threaded bushing | ■ G 1/2 ... 1<br>■ 1/2 ... 1 NPT |
| Threaded nipple | ■ G 1/2 ... 1<br>■ 1/2 ... 1 NPT |
| **Centre-to-centre distance** | Min. 150 mm to max. 6,000 mm<br>Larger distances on request |
| **Material** | ■ Stainless steel 1.4571 (316Ti)<br>■ Stainless steel 1.4401/1.4404 (316/316L) |
| **Max. nominal pressure** | 100 bar |
| **Temperature range** | -196 ... +450 °C |
| **Float** | ■ Cylindrical float<br>■ Corrugated float |
| **Magnetic display** | Standard version: < 200 °C<br>High-temperature version: > 200 °C |

Special versions on request

# Compact version, model BNA-C

Bypass chamber from stainless steel

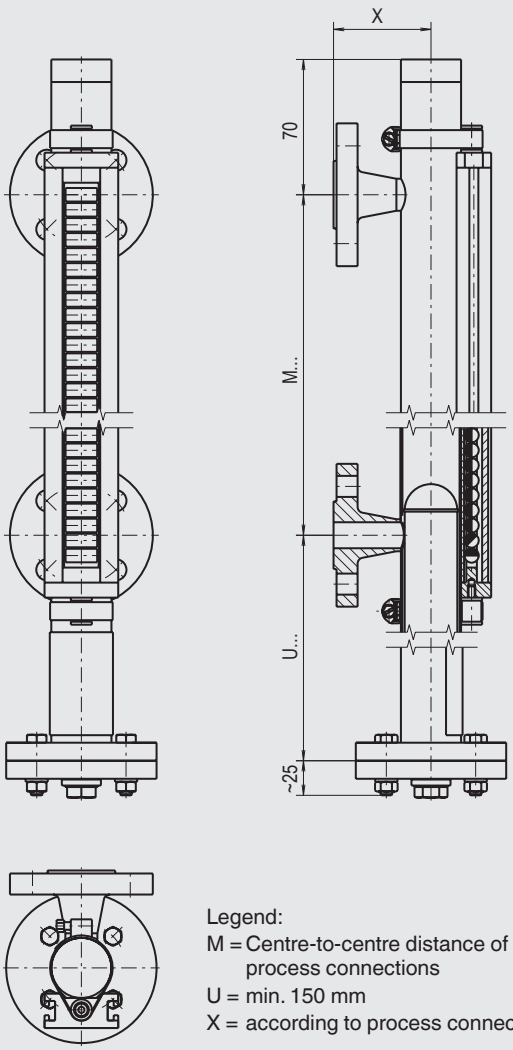


Legend:
M = Centre-to-centre distance of the process connections
U = min. 150 mm
X = according to process connection

| Specifications | |
|---|---|
| **Bypass chamber** | Ø 42.2 x 2 mm, max. 40 bar |
| **Chamber end top** | Pipe cap, flange or threaded connection<br>■ Vent screw<br>■ Vent valve<br>■ Vent flange<br>→ Options see page 17 |
| **Chamber end bottom** | Flange connection or threaded connection<br>■ Drain plug<br>■ Drain valve<br>■ Drain flange<br>→ Options see page 17 |
| **Process connections** | 2 x lateral (options see page 18) |
| Mounting flange | ■ EN 1092-1, DN 10 ... DN 50, PN 6 ... PN 40<br>■ DIN, DN 10 ... DN 50, PN 6 ... PN 40<br>■ Flange ANSI B 16.5, 1/2" ... 2.5", class 150 ... class 300 |
| Weld stub | 1/2" ... 1" |
| Threaded bushing | ■ G 1/2 ... 1<br>■ 1/2 ... 1 NPT |
| Threaded nipple | ■ G 1/2 ... 1<br>■ 1/2 ... 1 NPT |
| **Centre-to-centre distance** | Min. 150 mm to max. 5,000 mm |
| **Material** | Stainless steel 1.4571 (316Ti) |
| **Max. nominal pressure** | 40 bar |
| **Temperature range** | -196 ... +200 °C |
| **Float** | Cylindrical float |

Special versions on request

# High-pressure version, model BNA-H

Bypass chamber from stainless steel

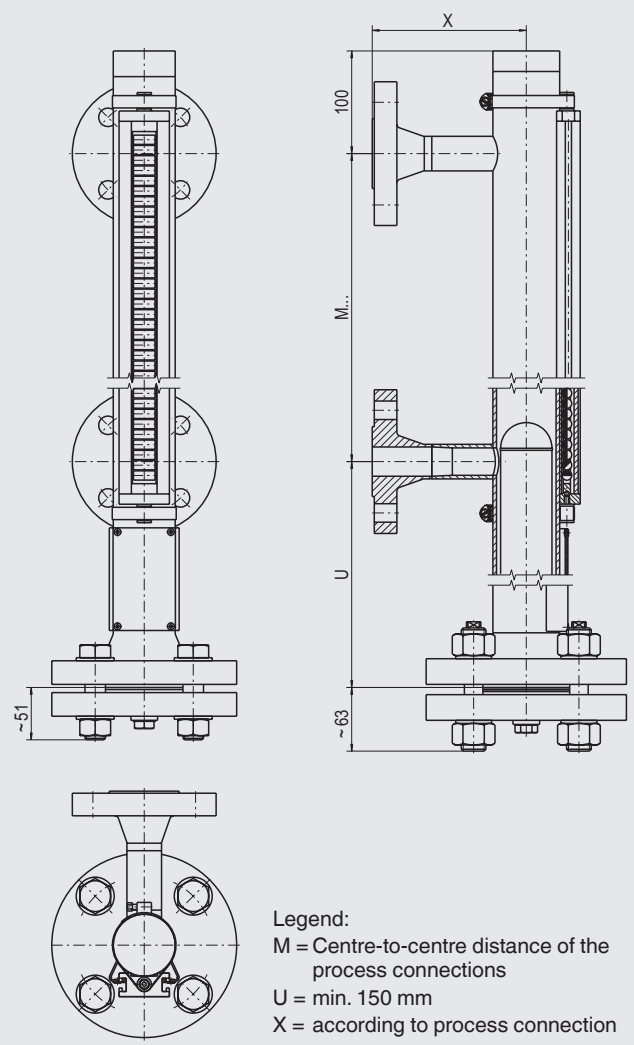


Legend:
M = Centre-to-centre distance of the process connections
U = min. 150 mm
X = according to process connection

| Specifications | |
|---|---|
| **Bypass chamber** | |
| Stainless steel 1.4571 | Ø 60.3 x 3.91 mm, max. 160 bar<br>Ø 76.1 x 5 mm, max. 100 bar<br>Ø 71 x 7.5 mm, max. 250 bar<br>Ø 76.1 x 10 mm, max. 385 bar |
| Stainless steel 1.4401/1.4404 | Ø 60.3 x 3.91 mm, max. 160 bar<br>Ø 60.3 x 5.54 mm, max. 250 bar<br>Ø 73 x 7.01 mm, max. 150 bar |
| **Chamber end top** | Pipe cap or flange connection<br>■ Vent screw<br>■ Vent valve<br>■ Vent flange<br>→ Options see page 17 |
| **Chamber end bottom** | Flange connection<br>■ Drain plug<br>■ Drain valve<br>■ Drain flange<br>→ Options see page 17 |
| **Process connections** | 2 x lateral (options see page 18) |
| Mounting flange | ■ EN 1092-1, DN 10 ... DN 100, PN 63 ... PN 400<br>■ DIN, DN 10 ... DN 100, PN 64 ... PN 400<br>■ Flange ANSI B 16.5, 1/2" ... 4", class 600 ... class 2,500 |
| Weld stub | 1/2" ... 1" |
| Threaded bushing | ■ G 1/2 ... 1<br>■ 1/2 ... 1 NPT |
| Threaded nipple | ■ G 1/2 ... 1<br>■ 1/2 ... 1 NPT |
| **Centre-to-centre distance** | Min. 150 mm to max. 6,000 mm<br>Larger distances on request |
| **Material** | ■ Stainless steel 1.4571 (316Ti)<br>■ Stainless steel 1.4401/1.4404 (316/316L) |
| **Max. nominal pressure** | 385 bar |
| **Temperature range** | -196 ... +450 °C |
| **Float** | ■ Cylindrical float<br>■ Ball-segment float<br>■ Foam float |
| **Magnetic display** | Standard version: < 200 °C<br>High-temperature version: > 200 °C |

Special versions on request

## Plastic version, model BNA-P

Bypass chamber and float from PVDF or PP

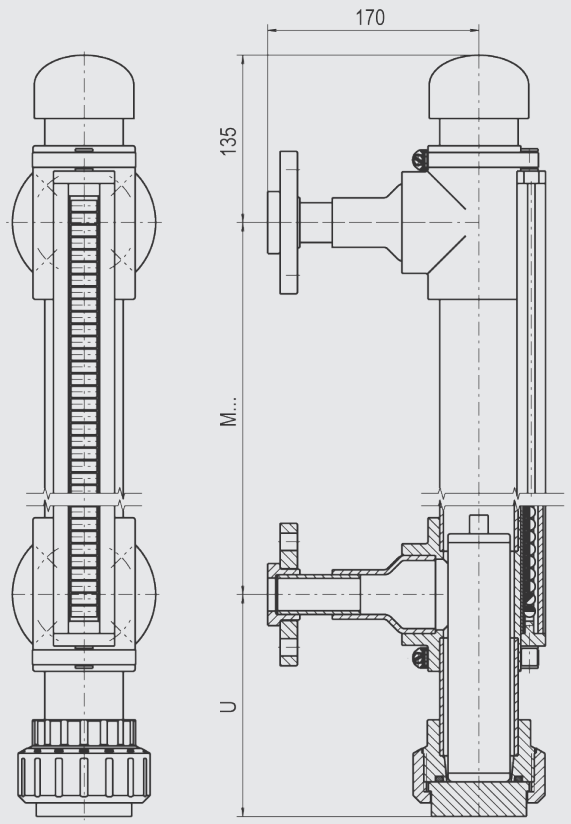


Legend:
M = Centre-to-centre distance of the process connections
U = min. 150 mm

| Specifications | |
|---|---|
| **Bypass chamber** | Ø 63 x 3 mm, max. 6 bar |
| **Chamber end top** | Pipe cap or threaded connection<br>■ Vent screw<br>■ Vent valve<br>■ Vent flange<br>→ Options see page 17 |
| **Chamber end bottom** | Threaded connection<br>■ Drain plug<br>■ Drain valve<br>■ Drain flange<br>→ Options see page 17 |
| **Process connections** | 2 x lateral (options see page 18) |
| Mounting flange | ■ EN 1092-1, DN 15 ... DN 50, PN 16<br>■ DIN, DN 15 ... DN 50, PN 16<br>■ Flange ANSI B 16.5, 1/2" ... 2", class 150 |
| Weld stub | 1/2" ... 1" |
| Threaded bushing | ■ G 1/2 ... 1<br>■ 1/2 ... 1 NPT |
| Threaded nipple | ■ G 1/2 ... 1<br>■ 1/2 ... 1 NPT |
| **Centre-to-centre distance** | Min. 200 mm to max. 4,000 mm<br>Larger distances on request |
| **Material** | ■ PVDF<br>■ PP |
| **Max. nominal pressure** | 6 bar |
| **Temperature range** | |
| PVDF | -10 … +100 °C |
| PP | -10 … +80 °C |
| **Float** | Plastic float |

Special versions on request

# DUPlus version, standard, model BNA-SD

Bypass chamber from stainless steel

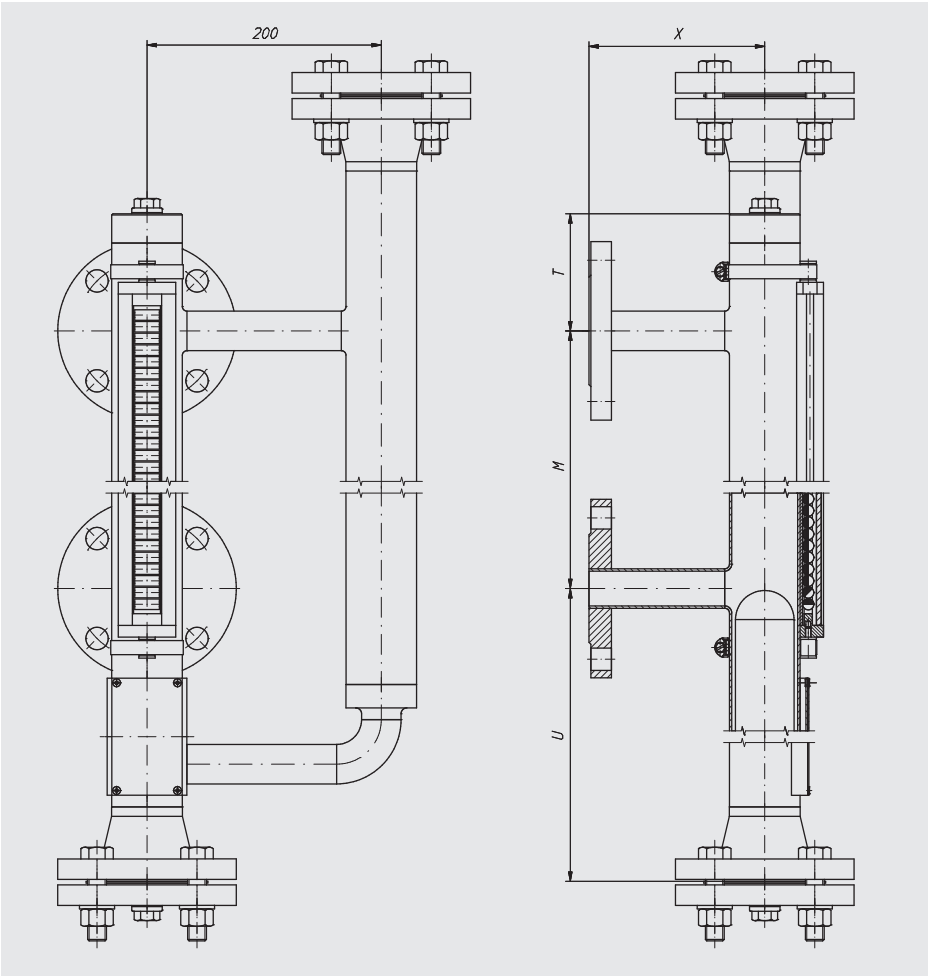


Legend:
M = Centre-to-centre distance of the process connections
U = min. 150 mm
X = according to process connection
T = min. 100 mm

| Specifications | |
|---|---|
| **Bypass chamber** | Ø 60.3 x 2 mm, max. 63 bar<br>Ø 60.3 x 2.77 mm, max. 100 bar |
| **Chamber end top** | Flange connection<br>■ Vent screw<br>■ Vent valve<br>■ Vent flange<br>→ Options see page 17 |
| **Chamber end bottom** | Pipe cap or flange connection<br>■ Drain plug<br>■ Drain valve<br>■ Drain flange<br>→ Options see page 17 |
| **Process connections** | 2 x lateral (options see page 18) |
| Mounting flange | ■ DIN, DN 10 ... DN 100, PN 6 ... PN 64<br>■ Flange ANSI B 16.5, 1/2" ... 4", class 150 ... class 600 |
| Weld stub | 1/2" ... 1" |
| Threaded bushing | ■ G 1/2 ... 1<br>■ 1/2 ... 1 NPT |
| Threaded nipple | ■ G 1/2 ... 1<br>■ 1/2 ... 1 NPT |

| Specifications | |
|---|---|
| **External sensor connection** | |
| Mounting flange | ■ EN 1092-1, DN 50, PN 6 ... PN 64<br>■ DIN, DN 50, PN 6 ... PN 64<br>■ ANSI B 16.5, 2" class 150 ... class 600 |
| Female thread | ■ G 3/4 ... 2<br>■ 3/4 ... 2 NPT |
| **Centre-to-centre distance** | Min. 150 mm to max. 6,000 mm<br>Larger distances on request |
| **Material** | ■ Stainless steel 1.4571 (316Ti)<br>■ Stainless steel 1.4401/1.4404 (316/316L) |
| **Max. nominal pressure** | 100 bar |
| **Temperature range** | -196 ... +450 °C |
| **Float** | ■ Cylindrical float<br>■ Corrugated float |
| **Magnetic display** | Standard version: < 200 °C<br>High-temperature version: > 200 °C |

Special versions on request

# DUPlus version, high pressure, model BNA-HD

Bypass chamber from stainless steel

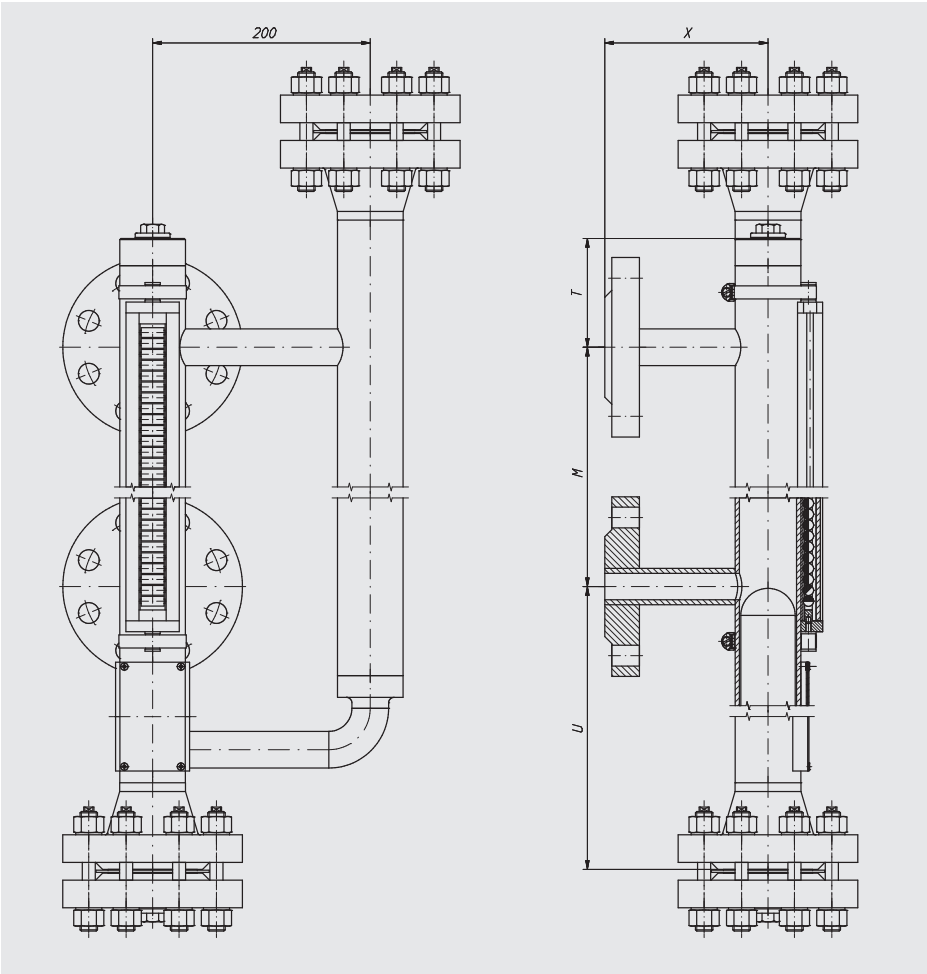


Legend:
M = Centre-to-centre distance of the process connections
U = min. 150 mm
X = according to process connection
T = min. 100 mm

| Specifications | |
|---|---|
| **Bypass chamber** | Ø 60.3 x 3.91 mm, max. 160 bar |
| **Chamber end top** | Flange connection<br>■ Vent screw<br>■ Vent valve<br>■ Vent flange<br>→ Options see page 17 |
| **Chamber end bottom** | Pipe cap or flange connection<br>■ Drain plug<br>■ Drain valve<br>■ Drain flange<br>→ Options see page 17 |
| **Process connections** | 2 x lateral (options see page 18) |
| Mounting flange | ■ DIN, DN 10 ... DN 100, PN 64 ... PN 160<br>■ Flange ANSI B 16.5, 1/2" ... 4", class 600 ... class 1,500 |
| Weld stub | 1/2" ... 1" |
| Threaded bushing | ■ G 1/2 ... 1<br>■ 1/2 ... 1 NPT |
| Threaded nipple | ■ G 1/2 ... 1<br>■ 1/2 ... 1 NPT |

| Specifications | |
|---|---|
| **External sensor connection** | |
| Mounting flange | ■ EN 1092-1, DN 50, PN 6 ... PN 160<br>■ DIN, DN 50, PN 6 ... PN 160<br>■ ANSI B 16.5, 2" class 150 ... class 1,500 |
| Female thread | ■ G 3/4 ... 2<br>■ 3/4 ... 2 NPT |
| **Centre-to-centre distance** | Min. 150 mm to max. 6,000 mm<br>Larger distances on request |
| **Material** | ■ Stainless steel 1.4571 (316Ti)<br>■ Stainless steel 1.4401/1.4404 (316/316L) |
| **Max. nominal pressure** | 160 bar |
| **Temperature range** | -196 ... +450 °C |
| **Float** | ■ Cylindrical float<br>■ Corrugated float |
| **Float** | ■ Cylindrical float<br>■ Corrugated float<br>■ Ball-segment float<br>■ Foam float |
| **Magnetic display** | Standard version: < 200 °C<br>High-temperature version: > 200 °C |

Special versions on request

# Liquid gas/KOPlus version, model BNA-L

Bypass chamber from stainless steel

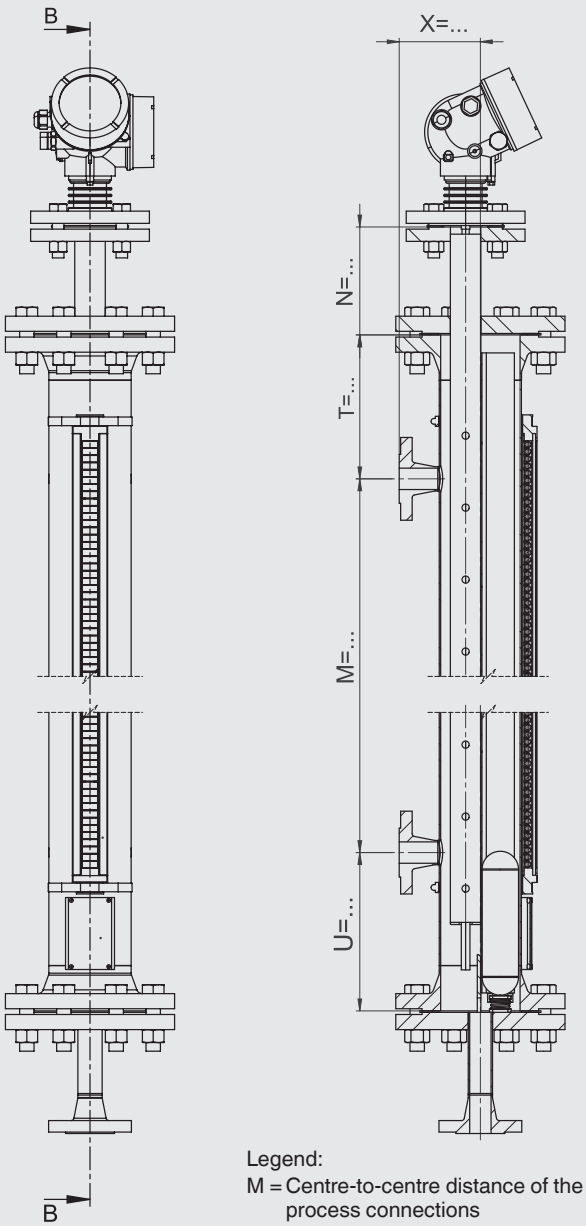


Legend:
M = Centre-to-centre distance of the process connections
U = min. 220 mm

**KOPlus version**

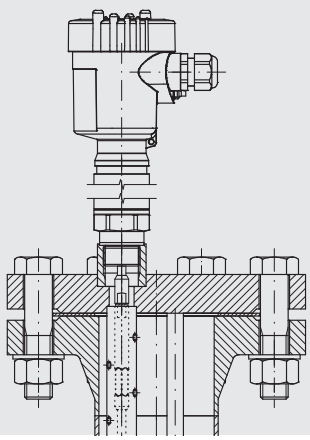

| Specifications | |
|---|---|
| **Bypass chamber** | |
| Stainless steel 1.4571 | Ø 88.9 x 2 mm, max. 40 bar<br>Ø 88.9 x 2.9 mm, max. 40 bar<br>Ø 114 x 2 mm, max. 25 bar<br>Ø 114 x 3.6 mm, max. 40 bar<br>Ø 114 x 4.5 mm, max. 40 bar<br>Ø 114 x 6.3 mm, max. 63 bar |
| Stainless steel 1.4401/1.4404 | Ø 88.9 x 2 mm, max. 40 bar<br>Ø 88.9 x 3.05 mm, max. 40 bar<br>Ø 114 x 2 mm, max. 25 bar<br>Ø 114 x 3.05 mm, max. 40 bar<br>Ø 114 x 6.02 mm, max. 63 bar |
| **Chamber end top** | Flange connection<br>■ Vent screw<br>■ Vent valve<br>■ Vent flange<br>→ Options see page 17 |
| **Chamber end bottom** | Flange connection<br>■ Drain plug<br>■ Drain valve<br>■ Drain flange<br>→ Options see page 17 |
| **Process connections** | 2 x lateral (options see page 18) |
| Mounting flange | ■ EN 1092-1, DN 10 ... DN 100, PN 6 ... PN 63<br>■ DIN, DN 10 ... DN 100, PN 6 ... PN 64<br>■ Flange ANSI B 16.5, 1/2" ... 4", class 150 ... class 600 |
| Weld stub | 1/2" ... 1" |
| Threaded bushing | ■ G 1/2 ... 1<br>■ 1/2 ... 1 NPT |
| Threaded nipple | ■ G 1/2 ... 1<br>■ 1/2 ... 1 NPT |
| **Centre-to-centre distance** | Min. 150 mm to max. 6,000 mm<br>Larger distances on request |
| **Material** | ■ Stainless steel 1.4571 (316Ti)<br>■ Stainless steel 1.4401/1.4404 (316/316L) |
| **Max. nominal pressure** | 63 bar |
| **Temperature range** | -196 ... +450 °C |
| **Float** | Cylindrical float |
| **Magnetic display** | Standard version: < 200 °C<br>High-temperature version: > 200 °C |

Special versions on request

# Special materials, model BNA-X

Bypass chamber from titanium, Hastelloy or stainless steel 6Mo

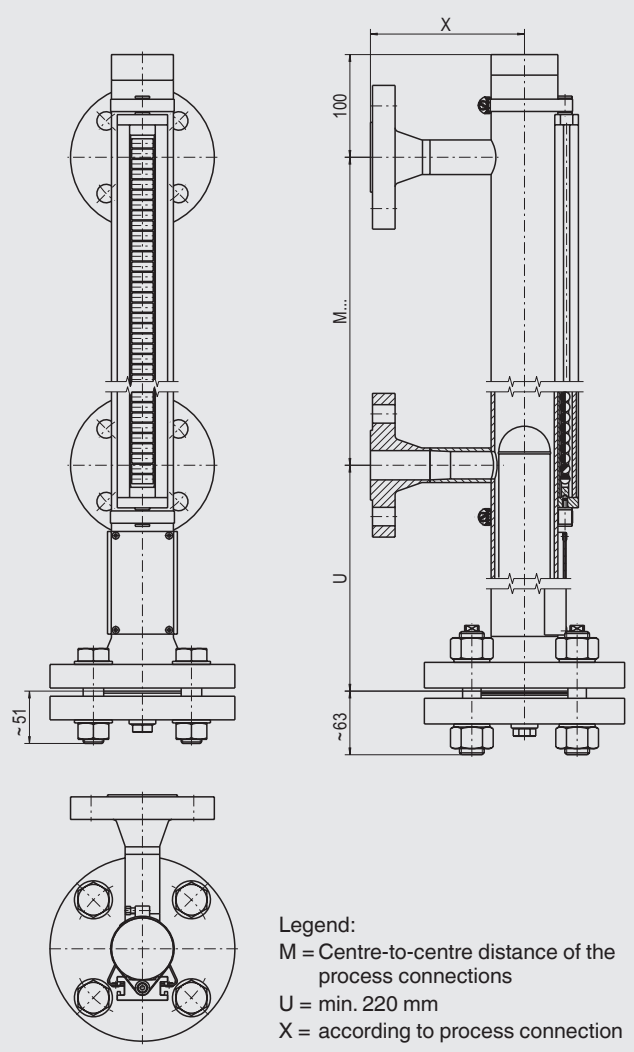


Legend:
M = Centre-to-centre distance of the process connections
U = min. 220 mm
X = according to process connection

| Specifications | |
|---|---|
| **Bypass chamber** | |
| Titanium 3.7035 | Ø 60.3 x 2 mm, max. 16 bar<br>Ø 60.3 x 2.77 mm, max. 40 bar |
| Hastelloy C276 | Ø 60.3 x 2.77 mm, max. 50 bar<br>Ø 60.3 x 3.91 mm, max. 160 bar |
| Stainless steel 6Mo 1.4547 (UNS S31254) | Ø 60.3 x 2.77 mm, max. 50 bar<br>Ø 60.3 x 3.91 mm, max. 160 bar<br>Ø 60.3 x 5.54 mm, max. 250 bar |
| **Chamber end top** | Pipe cap or threaded connection<br>■ Vent screw<br>■ Vent valve<br>■ Vent flange<br>→ Options see page 17 |
| **Chamber end bottom** | Flange connection<br>■ Drain plug<br>■ Drain valve<br>■ Drain flange<br>→ Options see page 17 |
| **Process connections** | 2 x lateral (options see page 18) |
| Titanium 3.7035 | Mounting flange<br>■ EN 1092-1, DN 10 ... DN 100, PN 6 ... PN 63<br>■ DIN, DN 10 ... DN 100, PN 6 ... PN 64<br>■ Flange ANSI B 16.5, 1/2" ... 4", class 150 ... class 600 |
| Hastelloy C276 | Mounting flange<br>■ EN 1092-1, DN 10 ... DN 100, PN 6 ... PN 400<br>■ DIN, DN 10 ... DN 100, PN 6 ... PN 400<br>■ Flange ANSI B 16.5, 1/2" ... 4", class 150 ... class 2,500 |
| Stainless steel 6Mo 1.4547 (UNS S31254) | Mounting flange<br>■ EN 1092-1, DN 10 ... DN 100, PN 63 ... PN 400<br>■ DIN, DN 10 ... DN 100, PN 64 ... PN 400<br>■ Flange ANSI B 16.5, 1/2" ... 4", class 600 ... class 2,500 |
| **Centre-to-centre distance** | Min. 150 mm to max. 6,000 mm<br>Larger distances on request |
| **Material** | ■ PVDF<br>■ PP |
| **Max. nominal pressure** | |
| Titanium 3.7035 | 40 bar |
| Hastelloy C276 | 160 bar |
| Stainless steel 6Mo 1.4547 (UNS S31254) | 250 bar |
| **Temperature range** | -10 … +450 °C |
| **Float** | ■ Cylindrical float<br>■ Corrugated float |
| **Magnetic display** | Standard version: < 200 °C<br>High-temperature version: > 200 °C |

1) Other materials on request

Special versions on request

## Special materials, model BNA-X

Bypass chamber from stainless steel with internal coating E-CTFE

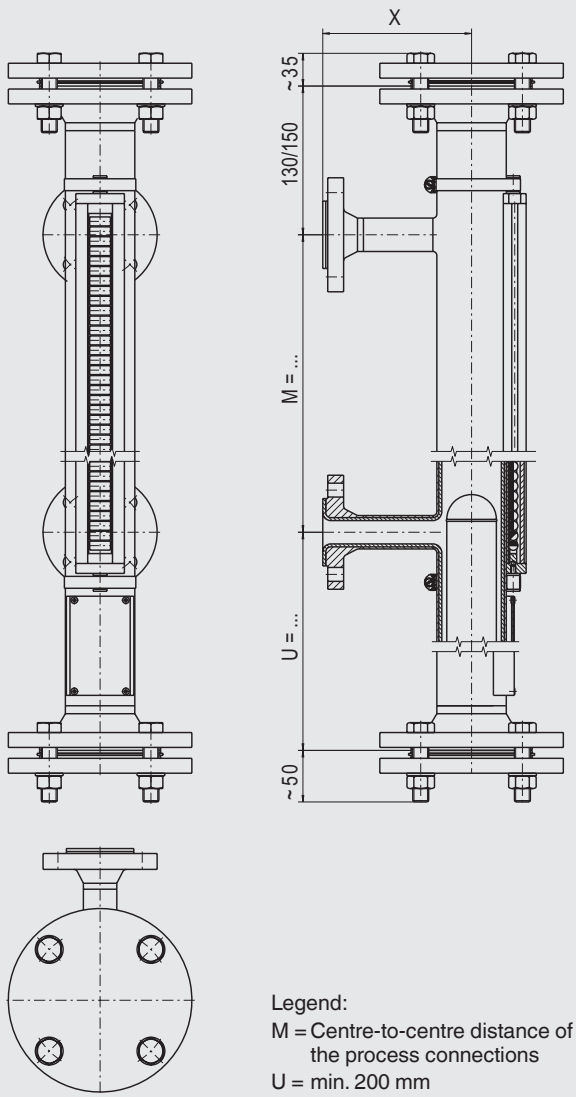


Legend:
M = Centre-to-centre distance of the process connections
U = min. 200 mm

| Specifications | |
|---|---|
| **Bypass chamber** | Ø 64 x 2 mm, max. 16 bar |
| **Chamber end top** | Flange connection<br>■ Vent flange<br>→ Options see page 17 |
| **Chamber end bottom** | Flange connection<br>■ Drain flange<br>→ Options see page 17 |
| **Process connections** | 2 x lateral (options see page 18) |
| Mounting flange | ■ EN 1092-1, DN 10 ... DN 50, PN 6 ... PN 16<br>■ DIN, DN 10 ... DN 50, PN 6 ... PN 16<br>■ Flange ANSI B 16.5, 1/2" ... 4", class 150 ... class 300 |
| **Centre-to-centre distance** | |
| Overall pipe length < 2,500 mm | Min. 150 mm to max. ... mm |
| Overall pipe length > 2,500 mm | Bypass chamber separated by flange connection |
| **Material** | Stainless steel 1.4571 with internal coating E-CTFE |
| **Max. nominal pressure** | 16 bar |
| **Temperature range** | Depending on medium |
| **Float** | Cylindrical float |

Special versions on request

## Special materials, model BNA-X

Bypass chamber from stainless steel with internal coating PTFE

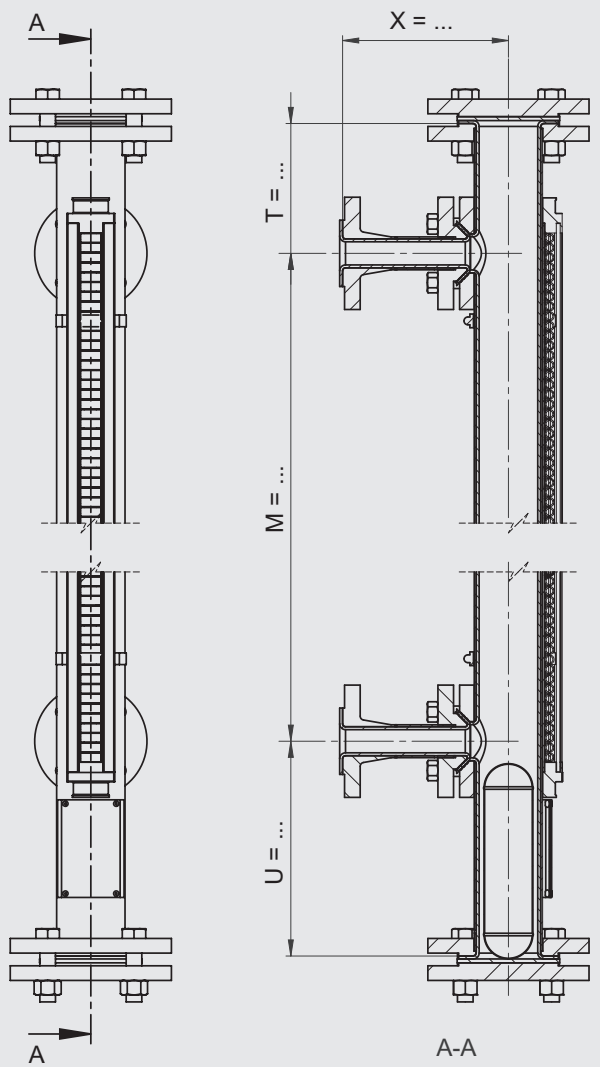


Legend:
M = Centre-to-centre distance of the process connections
U = min. 200 mm
X = according to process connection
T = min. 150 mm

| Specifications | |
|---|---|
| **Bypass chamber** | Ø 70 x 2 mm, max. 10 bar |
| **Chamber end top** | Flange connection<br>■ Vent flange<br>→ Options see page 17 |
| **Chamber end bottom** | Flange connection<br>■ Drain flange<br>→ Options see page 17 |
| **Process connections** | 2 x lateral (options see page 18) |
| Mounting flange | ■ EN 1092-1, DN 10 ... DN 50, PN 6 ... PN 16<br>■ DIN, DN 10 ... DN 50, PN 6 ... PN 16<br>■ Flange ANSI B 16.5, 1/2" ... 4", class 150 ... class 300 |
| **Centre-to-centre distance** | |
| Overall pipe length < 2,500 mm | Min. 150 mm to max. ... mm |
| Overall pipe length > 2,500 mm | Bypass chamber separated by flange connection |
| **Material** | Stainless steel 1.4571 with internal coating PTFE |
| **Max. nominal pressure** | 10 bar |
| **Temperature range** | Depending on medium |
| **Float** | Cylindrical float |

Special versions on request

# Heating jacket version, model BNA-J

Bypass chamber and heating jacket pipe from stainless steel

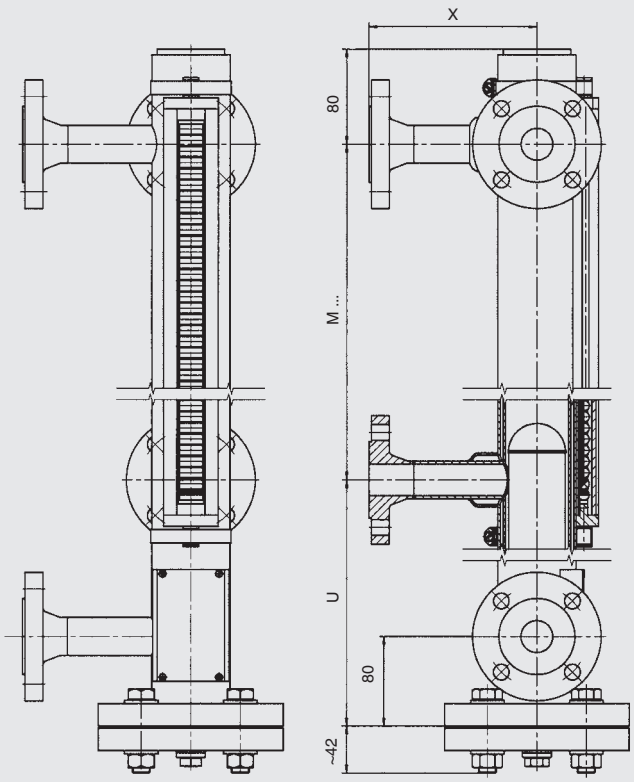


Process connection

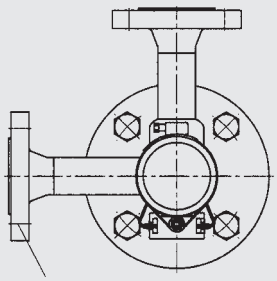

Heating jacket connection

Legend:
M = Centre-to-centre distance of the process connections
U = min. 220 mm

| Specifications | |
|---|---|
| **Bypass chamber** | Ø 60.3 x 2 mm, max. 40 bar<br>Ø 60.3 x 2.77 mm, max. 64 bar |
| **Heating jacket pipe** | Ø 70 x 2 mm |
| **Chamber end top** | Pipe cap<br>■ Vent screw<br>■ Vent valve<br>■ Vent flange<br>→ Options see page 17 |
| **Chamber end bottom** | Flange connection<br>■ Drain plug<br>■ Drain valve<br>■ Drain flange<br>→ Options see page 17 |
| **Process connections** | 2 x lateral (options see page 18) |
| Mounting flange | ■ EN 1092-1, DN 10 ... DN 100, PN 6 ... PN 100<br>■ DIN, DN 10 ... DN 100, PN 6 ... PN 100<br>■ Flange ANSI B 16.5, 1/2" ... 4", class 150 ... class 600 |
| Weld stub | 1/2" ... 1" |
| Threaded bushing | ■ G 1/2 ... 1<br>■ 1/2 ... 1 NPT |
| Threaded nipple | ■ G 1/2 ... 1<br>■ 1/2 ... 1 NPT |
| **Heating jacket connection** | |
| Mounting flange | ■ EN 1092-1, DN 10 ... DN 25, PN 6 ... PN 40<br>■ DIN, DN 10 ... DN 25, PN 6 ... PN 40<br>■ Flange ANSI B 16.5, 1/2" ... 4", class 150 ... class 300 |
| Threaded bushing | ■ G 1/2 ... 1<br>■ 1/2 ... 1 NPT |
| Threaded nipple | ■ G 1/2 ... 1<br>■ 1/2 ... 1 NPT |
| **Centre-to-centre distance** | Min. 150 mm to max. 6,000 mm<br>Larger distances on request |
| **Material** | ■ Stainless steel 1.4571 (316Ti)<br>■ Stainless steel 1.4401/1.4404 (316/316L) |
| **Max. nominal pressure** | 64 bar |
| **Temperature range** | -60 ... +450 °C |
| **Float** | Cylindrical float |
| **Magnetic display** | Standard version: < 200 °C<br>High-temperature version: > 200 °C |

Special versions on request

## Options for chamber ends

### Chamber end top (examples)

1
Pipe cap without venting

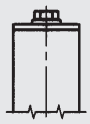

2
Pipe cap with vent screw G 1/2"

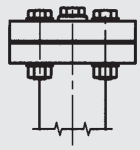

3
Flange connection with vent screw G 1/2"

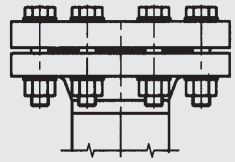

4
Flange connection e.g. sealing faces groove/tongue per DIN 2512

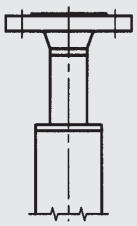

5
Pipe cap with vent flange

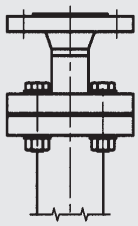

6
Flange connection Vent flange

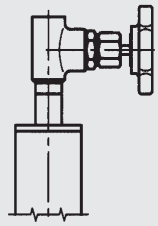

7
Pipe cap with vent valve

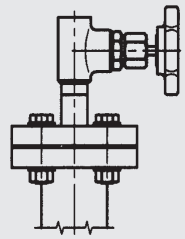

8
Flange connection with vent valve

### Chamber end bottom (examples)

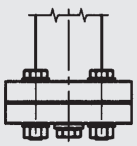

9
Flange connection with drain plug G/NPT 1/2"

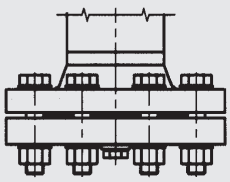

10
Flange connection e.g. sealing faces groove/tongue per DIN 2512 with drain plug G 1/2"

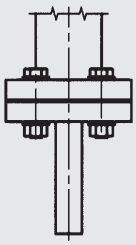

11
Flange connection with drain nozzle

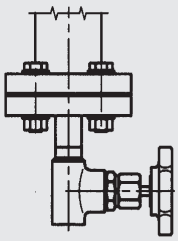

12
Flange connection with drain valve

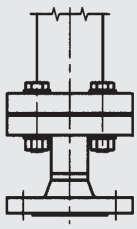

13
Flange connection with drain flange

Other options on request

## Option process connection

**Process connection (examples)**

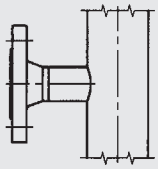

14
Welding neck flange
up to DN 25

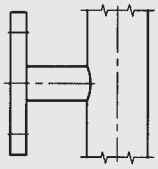

15
Blind flange
above DN 32

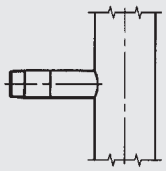

16
Threaded coupling GN ...
(male thread)

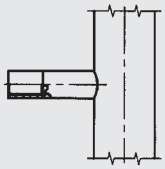

17
Threaded coupling GM ...
(female thread)

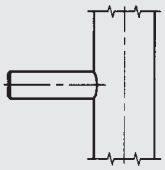

18
Weld stub S ...

**Complete instrument (examples)**

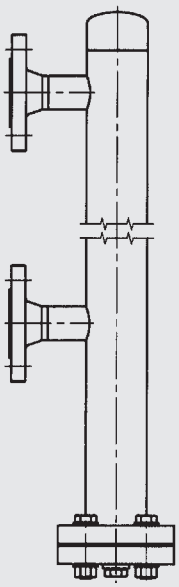

19
Standard version
Process connections 2 x lateral

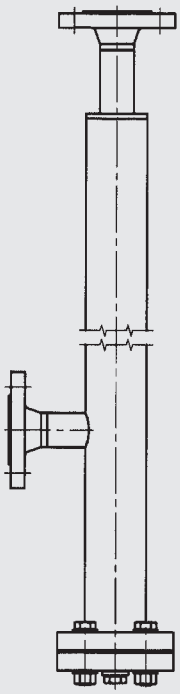

20
1 lateral process connection
1 vertical process connection
(top)

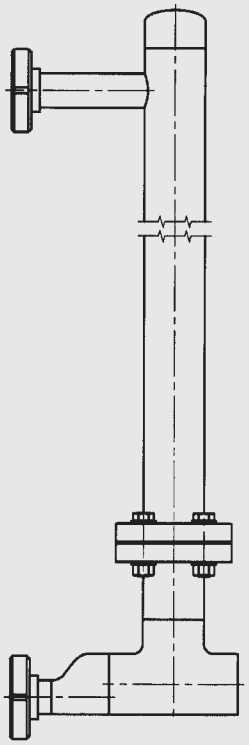

21
2 process connections per
DIN 11851
Lower process connection
via eccentric reducer

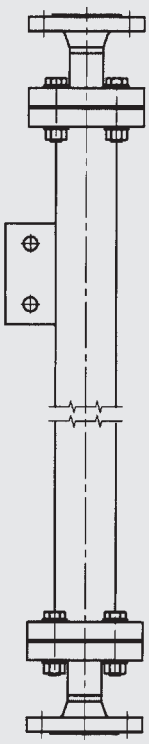

22
2 vertical process
connections (top/bottom)
Option: Support bracket

Other connections on request

**Ordering information**

Model / Material / Process specifications (operating temperature and pressure, density) / Process connection / Centre-to-centre distance M / Approvals

For detailed information on floats, magnetic displays, level transmitters (reed chain and magnetostrictive) and magnetic switches see the following data sheets:

- Float; model BFT; see data sheet LM 10.02
- Magnetic display; model BMD; see data sheet LM 10.03
- Reed level transmitter; model BLR; see data sheet LM 10.04
- Magnetostrictive level transmitter; model BLM; see data sheet LM 10.05
- Magnetic switch; model BGU; see data sheet LM 10.06

© 09/2010 WIKA Alexander Wiegand SE & Co. KG, all rights reserved.
The specifications given in this document represent the state of engineering at the time of publishing.
We reserve the right to make modifications to the specifications and materials.



**WIKA Alexander Wiegand SE & Co. KG**
Alexander-Wiegand-Straße 30
63911 Klingenberg/Germany
Tel. +49 9372 132-0
info@wika.de
www.wika.de