OBSOLETE

In-line diaphragm seal with sterile connection
Aseptic connections
Model 981.51

for further approvals, see page 5

Applications

- Ultra-pure steam systems
- Gases, compressed air, vapour; liquid, pasty, crystallising, flowing and pure media
- Pharmaceutical industry, biotechnology industry, production of active ingredients
- Aseptic plants or production of aseptic basic materials in the chemical industry

In-line diaphragm seal, model 981.51

Special features

- Dead-space free, direct installation in pipes
- Easy to open, self-draining in all mounting positions
- Quick cleaning, without residue
- Suitable for COP, SIP and CIP
- Autoclavable version

Description

Diaphragm seals are used for the protection of pressure measuring instruments in applications with difficult media. In diaphragm seal systems, the diaphragm of the diaphragm seal effects the separation of the instrument and the medium. The pressure is transmitted to the measuring instrument via the system fill fluid which is inside the diaphragm seal system.

For the implementation of demanding customer applications, there is a wide variety of designs, materials and system fill fluids available.

For further technical information on diaphragm seals and diaphragm seal systems see IN 00.06 “Application, operating principle, designs”.

Due to their hygienic process connection, the model 981.51 diaphragm seals are ideally suited for use in food production, pharmaceutical and biotechnology applications. The diaphragm seals can withstand the cleaning vapour temperatures occurring in the SIP processes and thus ensure a sterile connection between the medium to be measured and the diaphragm seal.

Mounting of the diaphragm seal to the measuring instruments may be made via a direct connection, for high temperatures via a cooling element or via a flexible capillary.

The availability of the diaphragm seals for common pipe standards and nominal widths simplifies integration into already existing pipe cross-sections.

Data sheets showing similar products:
Version with clamp connection; models 981.22, 981. 52, 981.53; see data sheet DS 98.52
Version with NEUMO BioConnect®; model 981.50; see data sheet DS 98.50
Version with thread; model 981.18 ... 21; see data sheet DS 98.40

Part of your business

OBSOLETE

Installation example

Model 981.51 with aseptic threaded pipe connection directly mounted to model PSD-4 pressure switch

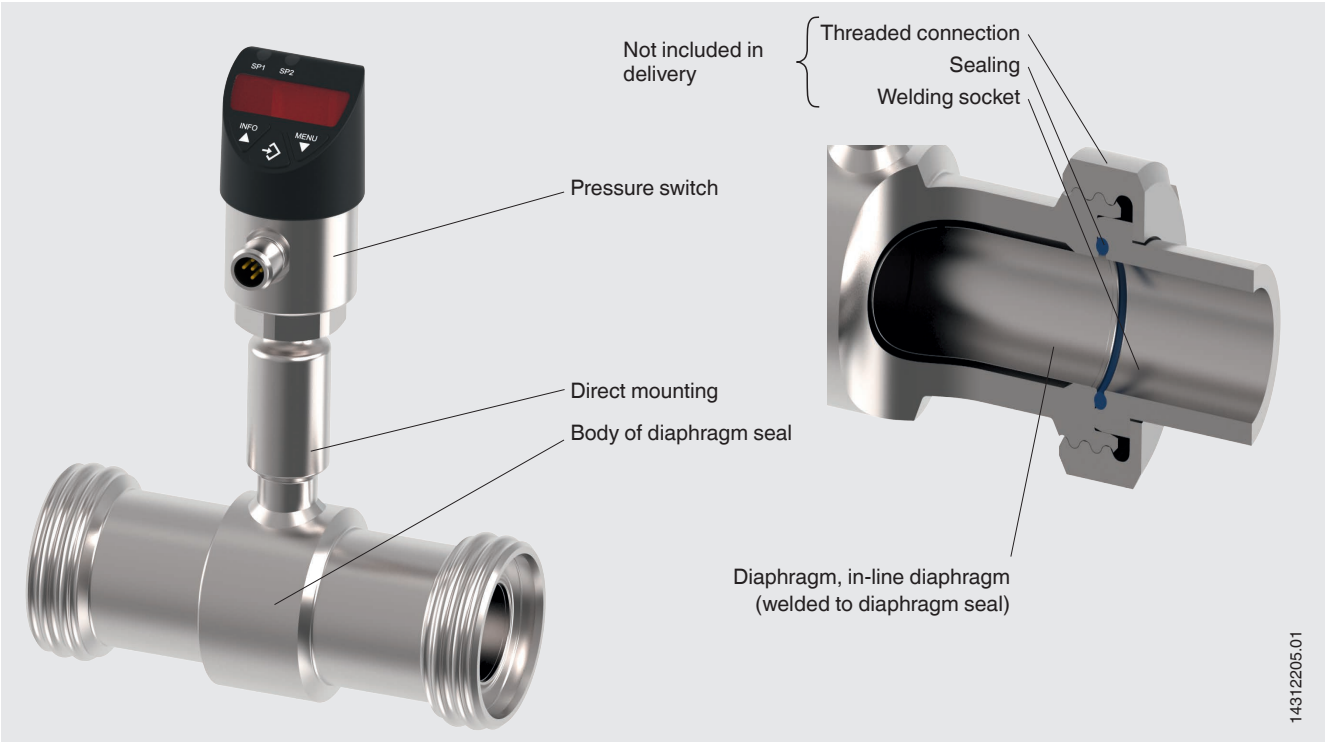

Specifications

Basic information	
Version	In-line diaphragm seal
Pressure range [1]	0 ... 0.6 bar to 0 ... 40 bar [0 ... 8.7 psi to 0 ... 580 psi] or all other equivalent vacuum or combined pressure and vacuum ranges
Connection to the measuring instrument	■ Axial gauge adapter for weld seam ■ Axial gauge adapter with female thread (e.g. G ½, G ¼, ½ NPT or ¼ NPT)
Mounting type	■ Direct mounting ■ Capillary ■ Cooling element
Level of cleanliness of wetted parts	■ Oil- and grease-free per ASTM G93-03 level F (< 1,000 mg/m²) ■ Oil- and grease-free per ASTM G93-03 level D and ISO 15001 (< 220 mg/m2) ■ Oil- and grease-free per ASTM G93-03 level C and ISO 15001 (< 66 mg/m²)
Origin of wetted parts	■ International ■ EU, CH, USA
Surface roughness of wetted parts	■ Ra ≤ 0.76 µm [30 µin] per ASME BPE SF3 (except for weld seam) ■ Ra ≤ 0.38 µm [15 µin] per ASME BPE SF4, only with electropolished surface (except for weld seam)
Vacuum service (see IN 00.25)	■ Basic service ■ Advanced service ■ Premium service

1) The maximum pressure range depends on the selection of the process connection. See PN nominal pressure in the tables from page 6.

OBSOLETE

Process connection	
Standard	
Aseptic threaded pipe connection DIN 11864-1 form A (O-ring)	■ Pipe standard per DIN 11866 row A or DIN 11850 row 2 ■ Pipe standard per DIN 11866 row B or DIN ISO 1127 row 1 ■ Pipe standard per DIN 11866 row C or ASME BPE 1997
Aseptic threaded pipe connection DIN 11864-2 form A (O-ring)	■ Pipe standard per DIN 11866 row A or DIN 11850 row 2 ■ Pipe standard per DIN 11866 row B or DIN ISO 1127 row 1 ■ Pipe standard per DIN 11866 row C or ASME BPE 1997
Aseptic threaded pipe connection DIN 11864-3 form A (O-ring)	■ Pipe standard per DIN 11866 row A or DIN 11850 row 2 ■ Pipe standard per DIN 11866 row B or DIN ISO 1127 row 1 ■ Pipe standard per DIN 11866 row C or ASME BPE 1997

Other process connections on request

Material		Maximum permissible process temperature [1] in °C [°F]
Body of diaphragm seal	**Wetted parts [1]**	
Stainless steel 1.4435 (316L)	Stainless steel 1.4435 (316L)	400 [752]
Stainless steel 1.4435 (316L), electropolished [2]	Stainless steel 1.4435 (316L), electropolished [2]	
Stainless steel 1.4539 (904L)	Stainless steel 1.4539 (904L)	
Hastelloy C22 (2.4602)	Hastelloy C22 (2.4602)	
Hastelloy C276 (2.4819)	Hastelloy C276 (2.4819)	

1) Marking of the parts with the material code guarantees 100 % material traceability
2) Only in connection with a surface roughness of Ra ≤ 0.38 µm [15 µin] for the wetted parts

Further materials for special process temperatures on request.

Instrument labelling	
Marking of the diaphragm seal	■ Without ■ Per valid 3-A standard

OBSOLETE

Mounting variants for pressure gauges

For horizontal pipelines

Variant 1

- Connection: Lower mount
- Pointer shaft: Crosswise to flow direction
- Mounting: Direct mounting, horizontal pipeline

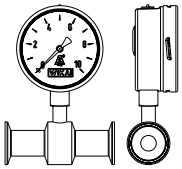

Variant 2

- Connection: Lower mount
- Pointer shaft: Parallel to flow direction
- Mounting: Direct mounting, horizontal pipeline

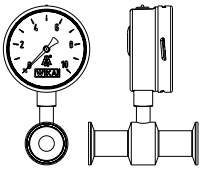

Variant 3

- Connection: Lower back mount
- Pointer shaft: Crosswise to flow direction
- Mounting: Direct mounting, horizontal pipeline

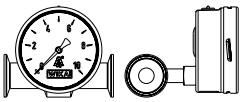

Variant 4

- Connection: “At 12 o'clock”
- Pointer shaft: Crosswise to flow direction
- Mounting: Direct mounting, horizontal pipeline

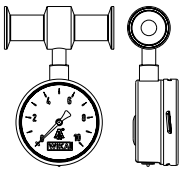

For vertical pipelines

Variant 1

- Connection: “At 3 o'clock”
- Pointer shaft: Crosswise to flow direction
- Mounting: Direct mounting, vertical pipeline

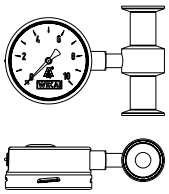

Variant 2

- Connection: “At 9 o'clock”
- Pointer shaft: Crosswise to flow direction
- Mounting: Direct mounting, vertical pipeline

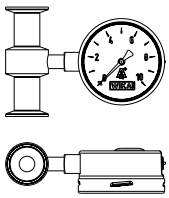

Variant 3

- Connection: Lower back mount
- Pointer shaft: Crosswise to flow direction
- Mounting: Direct mounting, vertical pipeline

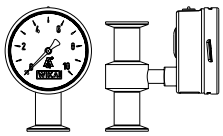

OBSOLETE

Approvals

Logo	Description	Country
CE	**EU declaration of conformity** Pressure equipment directive	European Union
3-A	**3-A** Sanitary Standard	USA
EHEDG	**EHEDG** [1)] Hygienic Equipment Design	European Union
-	**CRN** Safety (e.g. electr. safety, overpressure, ...)	Canada

1) EHEDG conformity only in combination with ASEPTO-STAR k-flex upgrade, sealing from Kieselmann GmbH.

Optional approvals

Logo	Description	Country
EAC	**EAC** Pressure equipment directive	Eurasian Economic Community
-	**MTSCHS** Permission for commissioning	Kazakhstan

Certificates (option)

Certificates	
Certificates	■ 2.2 test report per EN 10204 - State-of-the-art manufacturing, material proof, indication accuracy for diaphragm seal systems - FDA conformity of the system fill fluid - 3-A conformity of the diaphragm seal, based on a third party verification - Manufacturer‘s declaration for food contact materials per regulation (EC) no. 1935/2004 ■ 3.1 inspection certificate per EN 10204 - Material proof, wetted metal parts - Indication accuracy for diaphragm seal systems ■ Manufacturer‘s declaration for food contact materials per regulation (EC) no. 1935/2004

→ For approvals and certificates, see website

OBSOLETE

Dimensions in mm [in]

Process connection: Aseptic threaded pipe connection DIN 11864-1 form A (O-ring)

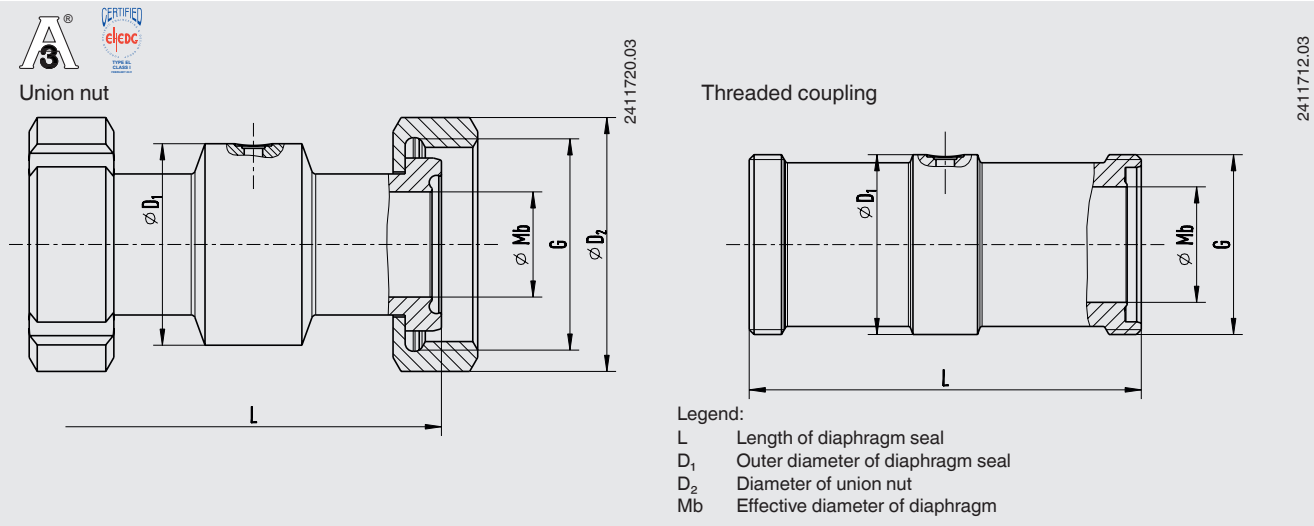

Pipe standard per DIN 11866 row A or DIN 11850 row 2

DN	PN	G	Dimensions in mm [in]					
			Pipe outer Ø x wall thickness	L	D_1	D_2	Mb	Aseptic O-ring
25	40	RD 52 x ⅙	29 x 1.5 [1.142 x 0.059]	128 [5.039]	52 [2.047]	63 [2.48]	26 [1.024]	28 x 3.5 [1.102 x 0.138]
32	40	RD 58 x ⅙	35 x 1.5 [1.378 x 0.059]	128 [5.039]	58 [2.283]	70 [2.756]	32 [1.26]	34 x 5 [1.339 x 0.197]
40	40	RD 65 x ⅙	41 x 1.5 [1.614 x 0.059]	160 [6.299]	65 [2.559]	78 [3.071]	38 [1.496]	40 x 5 [1.575 x 0.197]
50	25	RD 78 x ⅙	53 x 1.5 [2.087 x 0.059]	170 [6.693]	78 [3.071]	92 [3.622]	50 [1.969]	52 x 5 [2.047 x 0.197]
65	25	RD 96 x ⅙	70 x 2 [2.756 x 0.079]	182 [7.165]	95 [3.74]	112 [4.409]	66 [2.362]	68 x 5 [2.677 x 0.197]
80	25	RD 110 x ¼	85 x 2 [3.346 x 0.079]	182 [7.165]	110 [4.331]	127 [5]	81 [3.189]	83 x 5 [3.268 x 0.197]
100	25	RD 130 x ¼	104 x 2 [4.094 x 0.079]	182 [7.165]	130 [5.118]	148 [5.827]	100 [3.937]	102 x 5 [4.016 x 0.197]

Pipe standard per DIN 11866 row B or DIN ISO 1127 row 1

DN	PN	G	Dimensions in mm [in]					
			Pipe outer Ø x wall thickness	L	D_1	D_2	Mb	Aseptic O-ring
26.9	40	RD 52 x ⅙	26 x 1.6 [1.024 x 0.059]	128 [5.039]	52 [2.047]	63 [2.48]	23.7 [0.933]	28 x 3.5 [1.102 x 0.138]
33.7	40	RD 58 x ⅙	33.7 x 2 [1.327 x 0.079]	128 [5.039]	58 [2.283]	70 [2.756]	29.7 [1.169]	34 x 5 [1.339 x 0.197]
42.4	25	RD 65 x ⅙	42.4 x 2 [1.669 x 0.079]	160 [6.299]	65 [2.559]	78 [3.071]	38.4 [1.512]	40 x 5 [1.575 x 0.197]
48.3	25	RD 78 x ⅙	48.3 x 2 [1.902 x 0.079]	170 [6.693]	78 [3.071]	92 [3.622]	44.3 [1.744]	52 x 5 [2.047 x 0.197]
60.3	25	RD 96 x ⅙	60.3 x 2 [2.374 x 0.079]	182 [7.165]	95 [3.74]	112 [4.409]	56.3 [2.217]	68 x 5 [2.677 x 0.197]
76.1	25	RD 110 x ¼	76.1 x 2 [2.996 x 0.079]	182 [7.165]	110 [4.331]	127 [5]	72.1 [2.839]	83 x 5 [3.268 x 0.197]
88.9	25	RD 130 x ¼	88.9 x 2 [3.5 x 0.079]	182 [7.165]	130 [5.118]	148 [5.827]	84.3 [3.319]	102 x 5 [4.016 x 0.197]

Pipe standard per DIN 11866 row C or ASME BPE 1997

DN	PN	G	Dimensions in mm [in]					
			Pipe outer Ø x wall thickness	L	D_1	D_2	Mb	Aseptic O-ring
1"	40	RD 52 x ⅙	25.4 x 1.65 [1 x 0.059]	128 [5.039]	52 [2.047]	63 [2.48]	22.1 [0.87]	24 x 3.5 [0.945 x 0.138]
1 ½"	40	RD 65 x ⅙	42.4 x 1.65 [1.669 x 0.059]	160 [6.299]	65 [2.559]	78 [3.071]	34.8 [1.37]	37 x 5 [1.457 x 0.197]
2"	25	RD 78 x ⅙	48.3 x 1.65 [1.902 x 0.059]	170 [6.693]	78 [3.071]	92 [3.622]	47.5 [1.87]	50 x 5 [1.969 x 0.197]
2 ½"	25	RD 95 x ⅙	60.3 x 1.65 [2.374 x 0.059]	182 [7.165]	95 [3.74]	112 [4.409]	60.2 [2.37]	62 x 5 [2.441 x 0.197]
3"	25	RD 110 x ¼	76.1 x 1.65 [2.996 x 0.059]	182 [7.165]	110 [4.331]	127 [5]	72.9 [2.87]	75 x 5 [2.953 x 0.197]
4"	25	RD 130 x ¼	88.9 x 2.11 [3.5 x 0.083]	182 [7.165]	130 [5.118]	148 [5.827]	97.4 [3.835]	100 x 5 [3.937 x 0.197]

OBSOLETE

Process connection: Aseptic flange connection DIN 11864-2 form A (O-ring)

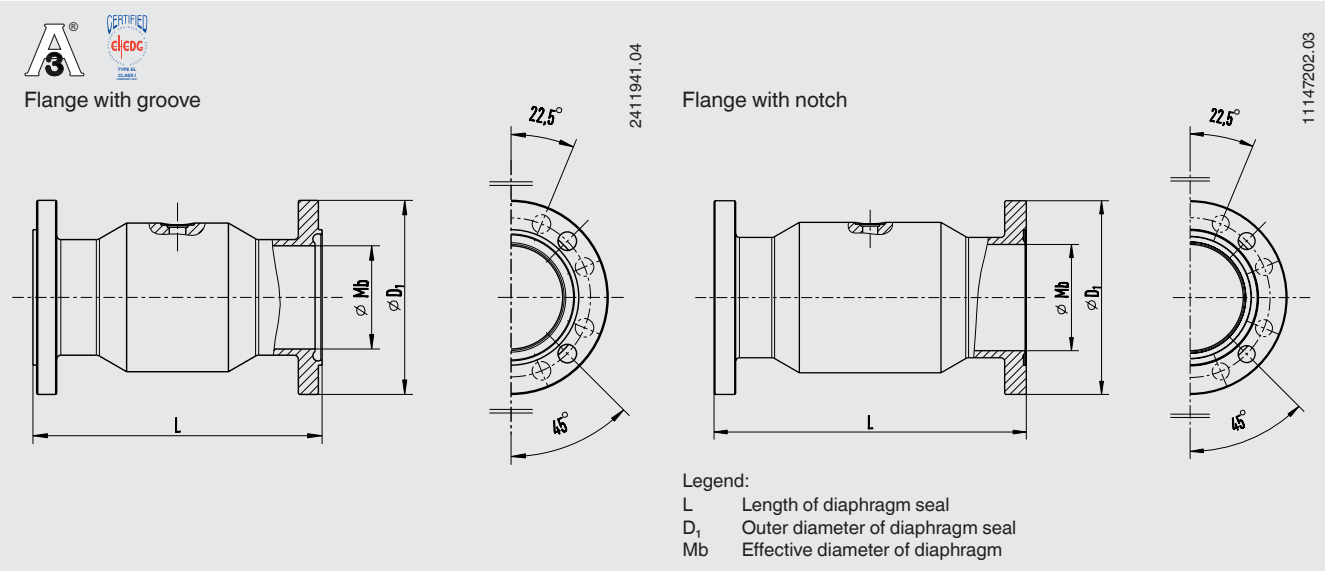

Pipe standard per DIN 11866 row A or DIN 11850 row 2

DN	PN	Dimensions in mm [in]				
		Pipe outer Ø x wall thickness	L	D_1	Mb	Aseptic O-ring
25	25	29 x 1.5 [1.142 x 0.059]	114 [4.489]	70 [2.756]	26 [1.024]	28 x 3.5 [1.102 x 0.138]
32	25	35 x 1.5 [1.378 x 0.059]	-	76 [2.992]	32 [1.26]	34 x 5 [1.339 x 0.197]
40	25	41 x 1.5 [1.614 x 0.059]	-	82 [7.228]	38 [1.496]	40 x 5 [1.575 x 0.197]
50	16	53 x 1.5 [2.087 x 0.059]	156 [6.142]	94 [3.701]	50 [1.969]	52 x 5 [2.047 x 0.197]
65	16	70 x 2 [2.756 x 0.079]	-	113 [4.449]	66 [2.362]	68 x 5 [2.677 x 0.197]
80	16	85 x 2 [3.346 x 0.079]	-	133 [5.236]	81 [3.189]	83 x 5 [3.268 x 0.197]
100	16	104 x 2 [4.094 x 0.079]	-	159 [6.26]	100 [3.937]	102 x 5 [4.016 x 0.197]

Pipe standard per DIN 11866 row B or DIN ISO 1127 row 1

DN	PN	Dimensions in mm [in]				
		Pipe outer Ø x wall thickness	L	D_1	Mb	Aseptic O-ring
26.9	25	26 x 1.6 [1.024 x 0.059]	-	69 [2.717]	23.7 [0.933]	26 x 3.5 [1.024 x 0.138]
33.7	25	33.7 x 2 [1.327 x 0.079]	114 [4.489]	74 [2.913]	29.7 [1.169]	32 x 5 [1.26 x 0.197]
42.4	16	42.4 x 2 [1.669 x 0.079]	-	82 [3.228]	38.4 [1.512]	40.5 x 5 [1.594 x 0.197]
48.3	16	48.3 x 2 [1.902 x 0.079]	-	88 [3.465]	44.3 [1.744]	46.5 x 5 [1.831 x 0.197]
60.3	16	60.3 x 2 [2.374 x 0.079]	156 [6.142]	103 [4.055]	56.3 [2.217]	58.5 x 5 [2.303 x 0.197]
76.1	16	76.1 x 2 [2.996 x 0.079]	-	125 [4.921]	72.1 [2.839]	73.5 x 5 [2.894 x 0.197]
88.9	16	88.9 x 2 [3.5 x 0.079]	156 [6.142]	137 [5.394]	84.3 [3.319]	86.5 x 5 [3.406 x 0.197]

Pipe standard per DIN 11866 row C or ASME BPE 1997

DN	PN	Dimensions in mm [in]				
		Pipe outer Ø x wall thickness	L	D_1	Mb	Aseptic O-ring
1"	25	25.4 x 1.65 [1 x 0.059]	114 [4.489]	50.5 [1.988]	22.1 [0.87]	24 x 3.5 [0.945 x 0.138]
1 ½"	25	42.4 x 1.65 [1.669 x 0.059]	-	64 [2.52]	34.8 [1.37]	37 x 5 [1.457 x 0.197]
2"	16	48.3 x 1.65 [1.902 x 0.059]	-	77.5 [3.051]	47.5 [1.87]	50 x 5 [1.969 x 0.197]
2 ½"	16	60.3 x 1.65 [2.374 x 0.059]	-	91 [3.583]	60.2 [2.37]	62 x 5 [2.441 x 0.197]
3"	16	76.1 x 1.65 [2.996 x 0.059]	-	106 [4.173]	72.9 [2.87]	75 x 5 [2.953 x 0.197]
4"	16	88.9 x 2.11 [3.5 x 0.083]	-	130 [5.118]	97.4 [3.835]	100 x 5 [3.937 x 0.197]

OBSOLETE

Process connection: Aseptic flange connection DIN 11864-3 form A (O-ring)

Clamp with groove

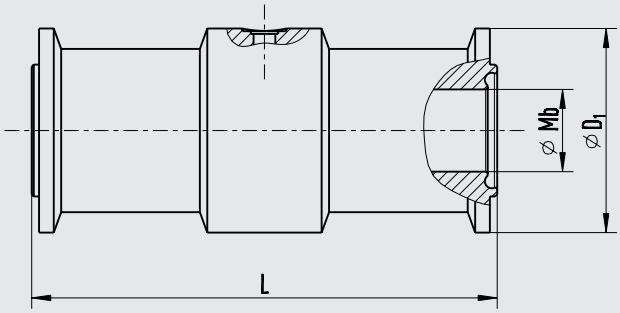

Clamp with notch

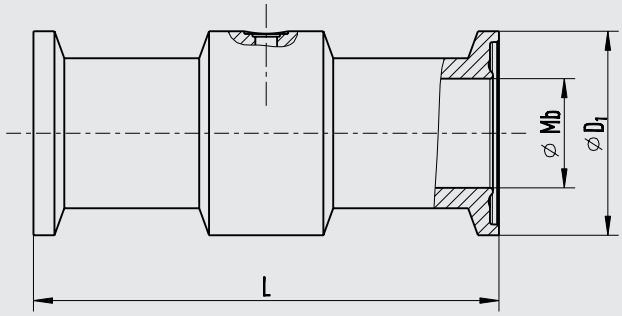

Legend:
L Length of diaphragm seal
D_1 Outer diameter of diaphragm seal
Mb Effective diameter of diaphragm

Pipe standard per DIN 11866 row A or DIN 11850 row 2

DN	PN	Dimensions in mm [in]				
		Pipe outer Ø x wall thickness	L	D_1	Mb	Aseptic O-ring
25	40	29 x 1.5 [1.142 x 0.059]	114 [4.489]	50.5 [1.988]	26 [1.024]	28 x 3.5 [1.102 x 0.138]
32	40	35 x 1.5 [1.378 x 0.059]	-	50.5 [1.988]	32 [1.26]	34 x 5 [1.339 x 0.197]
40	40	41 x 1.5 [1.614 x 0.059]	-	64 [2.52]	38 [1.496]	40 x 5 [1.575 x 0.197]
50	25	53 x 1.5 [2.087 x 0.059]	156 [6.142]	77.5 [3.051]	50 [1.969]	52 x 5 [2.047 x 0.197]
65	25	70 x 2 [2.756 x 0.079]	-	91 [3.583]	66 [2.362]	68 x 5 [2.677 x 0.197]
80	25	85 x 2 [3.346 x 0.079]	-	106 [4.173]	81 [3.189]	83 x 5 [3.268 x 0.197]
100	25	104 x 2 [4.094 x 0.079]	-	130 [5.118]	100 [3.937]	102 x 5 [4.016 x 0.197]

Pipe standard per DIN 11866 row B or DIN ISO 1127 row 1

DN	PN	Dimensions in mm [in]				
		Pipe outer Ø x wall thickness	L	D_1	Mb	Aseptic O-ring
26.9	40	26 x 1.6 [1.024 x 0.059]	-	50.5 [1.988]	23.7 [0.933]	26 x 3.5 [1.024 x 0.138]
33.7	40	33.7 x 2 [1.327 x 0.079]	-	50.5 [1.988]	29.7 [1.169]	32 x 5 [1.26 x 0.197]
42.4	25	42.4 x 2 [1.669 x 0.079]	-	64 [2.52]	38.4 [1.512]	40.5 x 5 [1.594 x 0.197]
48.3	25	48.3 x 2 [1.902 x 0.079]	-	64 [2.52]	44.3 [1.744]	46.5 x 5 [1.831 x 0.197]
60.3	25	60.3 x 2 [2.374 x 0.079]	-	91 [3.583]	56.3 [2.217]	58.5 x 5 [2.303 x 0.197]
76.1	25	76.1 x 2 [2.996 x 0.079]	-	106 [4.173]	72.1 [2.839]	73.5 x 5 [2.894 x 0.197]
88.9	25	88.9 x 2 [3.5 x 0.079]	-	119 [4.685]	84.3 [3.319]	86.5 x 5 [3.406 x 0.197]

Pipe standard per DIN 11866 row C or ASME BPE 1997

DN	PN	Dimensions in mm [in]				
		Pipe outer Ø x wall thickness	L	D_1	Mb	Aseptic O-ring
1"	40	25.4 x 1.65 [1 x 0.059]	114 [4.489]	50.5 [1.988]	22.1 [0.87]	24 x 3.5 [0.945 x 0.138]
1 ½"	40	38.1 x 1.65 [1.5 x 0.059]	-	64 [2.52]	34.8 [1.37]	37 x 5 [1.457 x 0.197]
2"	25	50.8 x 1.65 [2 x 0.059]	-	77.5 [3.051]	47.5 [1.87]	50 x 5 [1.969 x 0.197]
2 ½"	25	63.5 x 1.65 [2.5 x 0.059]	-	91 [3.583]	60.2 [2.37]	62 x 5 [2.441 x 0.197]
3"	25	76.2 x 1.65 [3 x 0.059]	-	106 [4.173]	72.9 [2.87]	75 x 5 [2.953 x 0.197]
4"	25	101.6 x 2.11 [4 x 0.083]	-	130 [5.118]	97.4 [3.835]	100 x 5 [3.937 x 0.197]

OBSOLETE

Accessories and spare parts

Model	Description	Order number
910.16 [1]	Instrument mounting bracket form H per DIN 16281, 100 mm, aluminium, black	9091858
	Instrument mounting bracket form H per DIN 16281, 100 mm, stainless steel	9091882
	Instrument mounting bracket for pipe mounting, for pipe Ø 20 ... 80 mm, electrogalvanised steel	9091904

1) See data sheet AC 09.07 for other versions.

Ordering information

Diaphragm seal:
Diaphragm seal model / Process connection (type of process connection, pipe standard, pipe dimension) / Material (base body, diaphragm) / Surface roughness of wetted parts / Sealing / Zero point stabilisation (ZPS) / Connection to the measuring instrument / Level of cleanliness of wetted parts / Origin of wetted parts / Certificates

Diaphragm seal system:
Diaphragm seal model / Process connection (type of process connection, pipe standard, pipe dimension) / Material (base body, diaphragm) / Surface roughness of wetted parts / Sealing / Zero point stabilisation (ZPS) / Pressure measuring instrument model (per data sheet) / Mounting (direct mounting horizontal/vertical, cooling element horizontal/vertical, capillary) / min. and max. process temperature / min. and max. ambient temperature / Vacuum service / System fill fluid / Certificates / Height difference / Level of cleanliness of wetted parts / Origin of wetted parts / Instrument mounting bracket

© 11/2002 WIKA Alexander Wiegand SE & Co. KG, all rights reserved.
The specifications given in this document represent the state of engineering at the time of publishing.
We reserve the right to make modifications to the specifications and materials.

WIKA Alexander Wiegand SE & Co. KG
Alexander-Wiegand-Straße 30
63911 Klingenberg/Germany
Tel. +49 9372 132-0
Fax +49 9372 132-406
info@wika.de
www.wika.de