OBSOLETE

In-line diaphragm seal with sterile connection With union nut (milk thread fitting) Models 981.18, 981.19, 981.20 and 981.21

For further approvals see page 4

Applications

- Gases, compressed air, vapour; liquid, pasty, crystallising and flowing media
- Food and beverage production
- Dairies and dairy products
- Breweries, filling systems
- Filtration, separation, pasteurisation

Special features

- For direct, quickly removable installation in pipelines
- Self-draining in all mounting positions
- Quick cleaning, without residue
- Suitable for COP, SIP and CIP
- Dead-space free installation in pipes

In-line diaphragm seal, model 981.18

Description

Diaphragm seals are used for the protection of pressure measuring instruments in applications with difficult media. In diaphragm seal systems, the diaphragm of the diaphragm seal effects the separation of the instrument and the medium. The pressure is transmitted to the measuring instrument via the system fill fluid which is inside the diaphragm seal system.

For the implementation of demanding customer applications, there is a wide variety of designs, materials and system fill fluids available.

For further technical information on diaphragm seals and diaphragm seal systems see IN 00.06 “Application, operating principle, designs”.

Due to their hygienic process connection, the model 981.18, 981.19, 981.20 and 981.21 diaphragm seals are particularly well suited for food production. The diaphragm seals can withstand the cleaning vapour temperatures occurring in the SIP processes and thus ensure a sterile connection between the medium to be measured and the diaphragm seal.

Mounting of the diaphragm seal to the measuring instrument may be made via a direct connection, for high temperatures via a cooling element or via a flexible capillary.

The availability of the diaphragm seals for common pipe standards and nominal widths simplifies integration into already existing pipe cross-sections.

WIKA
Smart in sensing

Data sheets showing similar products:
Version with clamp connection; models 981.22, 981.52 and 981.53; see data sheet DS 98.52
Version with NEUMO BioConnect®; model 981.50; see data sheet DS 98.50
Version with aseptic connection; model 981.51; see data sheet DS 98.51

OBSOLETE

Specifications

Models 981.18, 981.19, 981.20 and 981.21	Standard	Option
Pressure range [1]	0 ... 0.6 bar to 0 ... 40 bar [0 ... 8.7 psi to 0 ... 580 psi] or all other equivalent vacuum or combined pressure and vacuum ranges	
Level of cleanliness of wetted parts	Oil and grease free per ASTM G93-03 level F WIKA standard (< 1,000 mg/m²)	■ Oil and grease free per ASTM G93-03 level D and ISO 15001 (< 220 mg/m²) ■ Oil and grease free per ASTM G93-03 level C and ISO 15001 (< 66 mg/m²)
Origin of wetted parts	International	EU, CH, USA
Surface roughness of wetted parts	Ra ≤ 0.76 µm [30 µin] per ASME BPE SF3 (except for weld seam)	Ra ≤ 0.38 µm [15 µin] per ASME BPE SF4, only with electropolished surface (except for weld seam)
Connection to the measuring instrument	Axial gauge adapter	Axial gauge adapter with G ½, G ¼, ½ NPT or ¼ NPT (female)
Type of mounting	Direct mounting	■ Capillary ■ Cooling element
Vacuum service (see IN 00.25)	Basic service	■ Premium service ■ Advanced service
Process connection	With union nut on both sides	■ With threaded coupling on both sides ■ One side with union nut and one side with thread-ed coupling
Marking of the diaphragm seal	-	Per valid 3-A standard
Instrument mounting bracket (only for capillary option)	-	■ Form H per DIN 16281, 100 mm, aluminium, black ■ Form H per DIN 16281, 100 mm, stainless steel ■ Bracket for pipe mounting, for pipe Ø 20 ... 80 mm, steel (see data sheet AC 09.07)

1) The maximum pressure range depends on the selection of the process connection. See PN nominal pressure in the tables from page 5.

Installation example, model 981.18 directly mounted to Bourdon tube pressure gauge

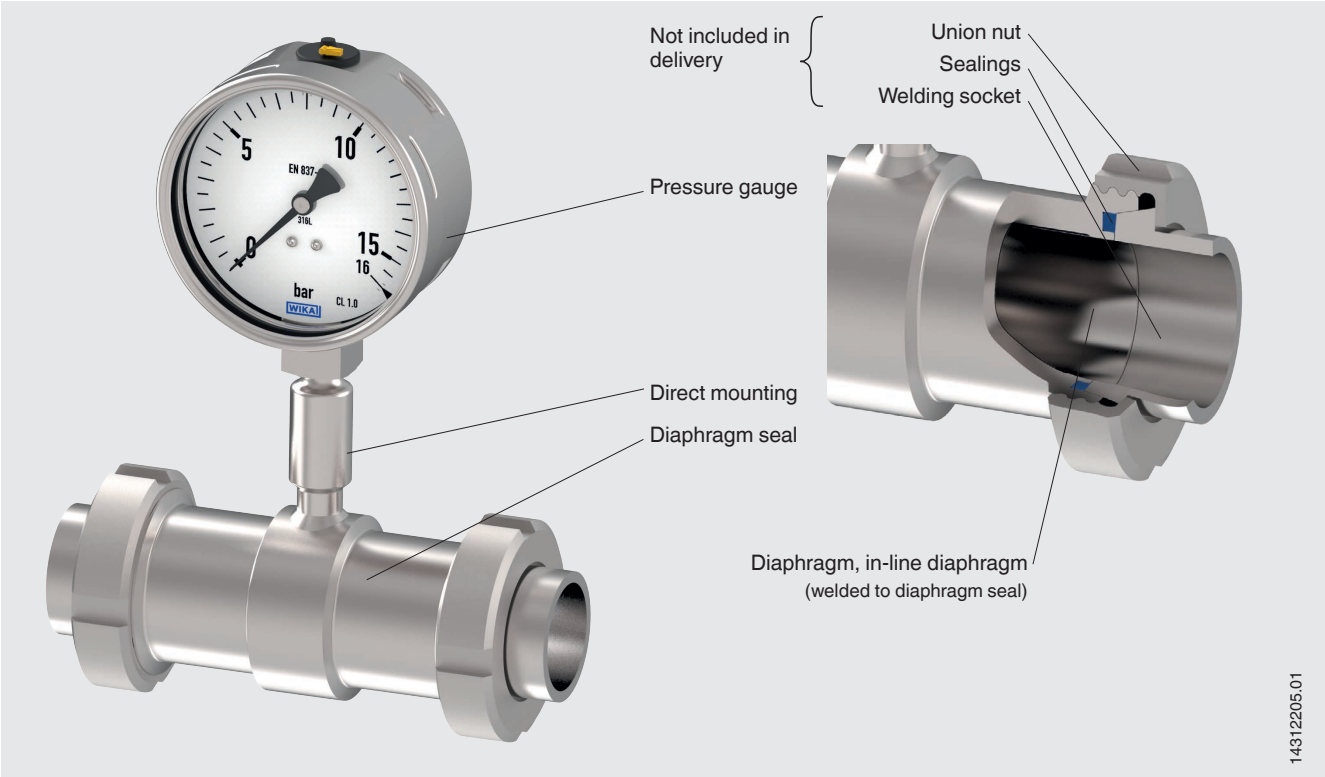

OBSOLETE

Mounting variants for pressure gauges

For horizontal pipelines

Variant 1

- Connection: Lower mount
- Pointer shaft: Crosswise to flow direction
- Mounting: Direct mounting, horizontal pipeline

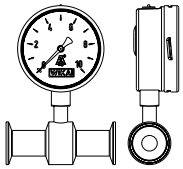

Variant 2

- Connection: Lower mount
- Pointer shaft: Parallel to flow direction
- Mounting: Direct mounting, horizontal pipeline

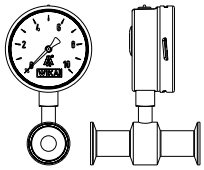

Variant 3

- Connection: Lower back mount
- Pointer shaft: Crosswise to flow direction
- Mounting: Direct mounting, horizontal pipeline

Variant 4

- Connection: “At 12 o'clock”
- Pointer shaft: Crosswise to flow direction
- Mounting: Direct mounting, horizontal pipeline

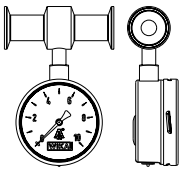

For vertical pipelines

Variant 1

- Connection: “At 3 o'clock”
- Pointer shaft: Crosswise to flow direction
- Mounting: Direct mounting, vertical pipeline

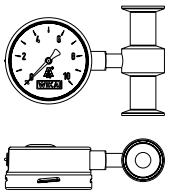

Variant 2

- Connection: “At 9 o'clock”
- Pointer shaft: Crosswise to flow direction
- Mounting: Direct mounting, vertical pipeline

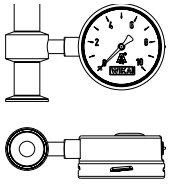

Variant 3

- Connection: Lower back mount
- Pointer shaft: Crosswise to flow direction
- Mounting: Direct mounting, vertical pipeline

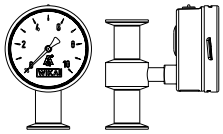

Material combinations

Upper body of diaphragm seal	Wetted parts (diaphragm) [1]
Stainless steel 1.4435 (316L)	Stainless steel 1.4435 (316L)
Stainless steel 1.4435 (316L), electropolished [2]	Stainless steel 1.4435 (316L), electropolished [2]

1) Marking of the parts with the material code guarantees 100 % material traceability
2) Only in connection with a surface roughness of Ra ≤ 0.38 µm for the wetted parts

Further material combinations for special process temperatures on request.

OBSOLETE

Approvals

Logo	Description	Region
CE	**EU declaration of conformity** Pressure Equipment Directive	European Union
3-A	**3-A** Hygienic Design This instrument is 3-A marked, based on a third party verification for conformance to the 3-A standard.	USA
EHEDG	**EHEDG** [1)] Hygienic Design	European Union
-	**CRN** Safety (e.g. electr. safety, overpressure, ...)	Canada

1) EHEDG conformity only in combination with ASEPTO-STAR k-flex upgrade, sealing from Kieselmann GmbH.

Certificates

Description	
Certificates	■ 2.2 test report per EN 10204 (e.g. state-of-the-art manufacturing, material proof, indication accuracy for diaphragm seal systems) ■ 3.1 inspection certificate per EN 10204 (e.g. material proof for wetted metallic parts, indication accuracy for diaphragm seal systems) ■ FDA conformity of the system fill fluid ■ 3-A conformity of the diaphragm seal, based on a third party verification ■ EHEDG conformity ■ Manufacturer‘s declaration for food contact materials regarding regulation (EC) No. 1935/2004 ■ Others on request

→ For approvals and certificates, see website

OBSOLETE

Dimensions in mm [in]

Model 981.18, threaded connection per DIN 11851

Pipe standard: Pipes per DIN 11850 row 2

1)

Threaded coupling

14310124.01

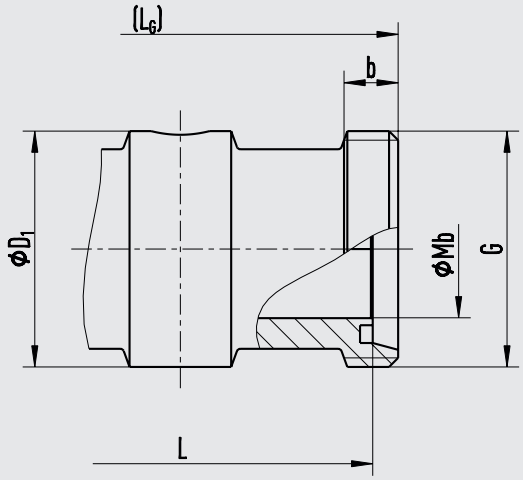

Union nut

14310211.01

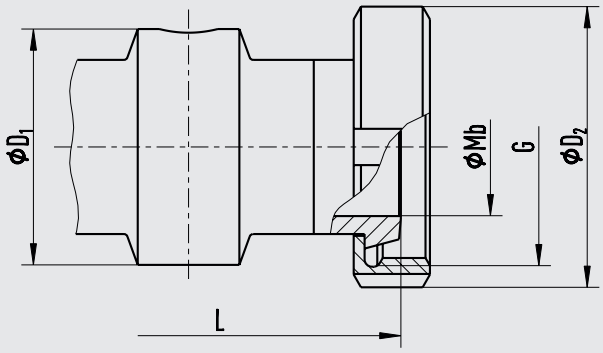

Legend:

L	Insertion length
D_1	Outer diameter of diaphragm seal
Mb	Effective diameter of diaphragm
L_G	Overall length
b	Thread length
D_2	Outer diameter of union nut

DN	PN 2)	G	Dimensions in mm [in]						
			Pipe outer Ø x wall thickness	L	D_1	Mb	L_G	b	D_2
15	40	RD 34 x 1/8	19 x 1.5 [0.748 x 0.059]	96 [3.78]	34 [1.339]	16 [0.63]	104 [4.094]	12 [0.472]	44 [1.732]
20	40	RD 44 x 1/6	23 x 1.5 [0.906 x 0.059]	106 [4.173]	44 [1.732]	20 [0.787]	118 [4.646]	14 [0.551]	54 [2.126]
25	40	RD 52 x 1/6	29 x 1.5 [1.142 x 0.059]	114 [4.488]	52 [2.047]	26 [1.024]	128 [5.039]	14 [0.551]	63 [2.48]
32	40	RD 58 x 1/6	35 x 1.5 [1.378 x 0.059]	126 [4.961]	58 [2.283]	32 [1.26]	140 [5.512]	14 [0.551]	70 [2.756]
40	40	RD 65 x 1/6	41 x 1.5 [1.614 x 0.059]	146 [5.748]	65 [2.559]	38 [1.496]	160 [6.299]	14 [0.551]	78 [3.071]
50	25	RD 78 x 1/6	53 x 1.5 [2.087 x 0.059]	156 [6.142]	78 [3.071]	50 [1.969]	170 [6.693]	14 [0.551]	92 [3.622]
65	25	RD 96 x 1/6	70 x 1.5 [2.756 x 0.059]	166 [6.535]	95 [3.74]	66 [2.362]	182 [7.165]	16 [0.63]	112 [4.409]
80	25	RD 110 x 1/4	85 x 2 [3.346 x 0.079]	166 [6.535]	110 [4.331]	81 [3.189]	182 [7.165]	20 [0.787]	127 [5]
100	25	RD 130 x 1/4	104 x 2 [4.094 x 0.079]	162 [6.378]	130 [5.118]	100 [3.937]	182 [7.165]	20 [0.787]	148 [5.827]

1) EHEDG conformity only in combination with ASEPTO-STAR k-flex upgrade, sealing from Kieselmann GmbH.
2) The specification PN in accordance with the above-mentioned standards is used exclusively for the classification of the connection. The maximum allowable pressure PS within the meaning of the Pressure Equipment Directive 2014/68/EU is independent of this and is marked on the diaphragm seal.

OBSOLETE

Model 981.19, threaded connection following Svensk Standard

Pipe standard: Pipes per ISO 1127 row 2 or ISO 2037/1992

Threaded coupling (SS 1146)

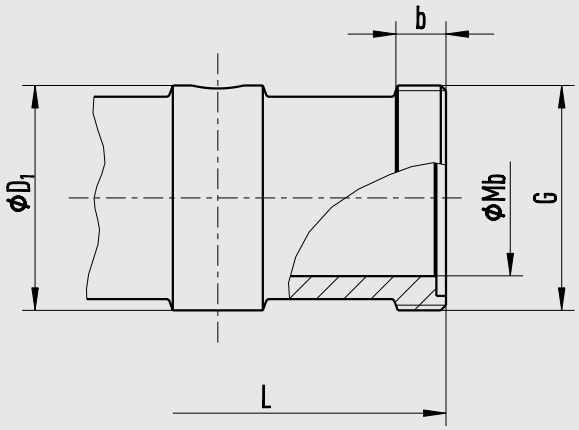

14310407.01

Union nut (SS 1148)

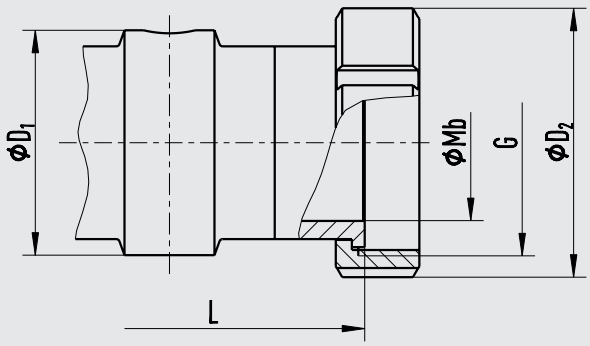

14310409.01

Legend:

L	Insertion length
D_1	Outer diameter of diaphragm seal
Mb	Effective diameter of diaphragm
b	Thread length
D_2	Outer diameter of union nut

DN	PN [1]	G	Dimensions in mm [in]					
			Pipe outer Ø x wall thickness	L	D_1	Mb	b	D_2
25	40	RD 40 x 1/6	25 x 1.2 [0.984 x 0.047]	120 [4.724]	40 [1.575]	22.6 [0.89]	11 [0.433]	51 [2.008]
38	40	RD 60 x 1/6	38 x 1.2 [1.496 x 0.047]	152 [5.984]	60 [2.362]	35.6 [1.402]	15 [0.591]	74 [2.913]
51	40	RD 70 x 1/6	51 x 1.2 [2.008 x 0.047]	162 [6.378]	70 [2.756]	48.6 [1.913]	15 [0.591]	84 [3.307]
63,5	25	RD 85 x 1/6	63.5 x 1.2 [2.5 x 0.047]	162 [6.378]	85 [3.346]	60.3 [2.374]	19 [0.748]	100 [3.937]
76	25	RD 98 x 1/6	76.1 x 1.6 [2.996 x 0.063]	162 [6.378]	98 [3.858]	73 [2.874]	19 [0.748]	114 [4.488]

1) The specification PN in accordance with the above-mentioned standards is used exclusively for the classification of the connection. The maximum allowable pressure PS within the meaning of the Pressure Equipment Directive 2014/68/EU is independent of this and is marked on the diaphragm seal.

OBSOLETE

Model 981.20, threaded connection following IDF standard (ISO 2853 and BS 4825 part 4)

Pipe standard: Pipes per ISO 1127 row 2 or ISO 2037/1992

1)

Threaded coupling

14310966.01

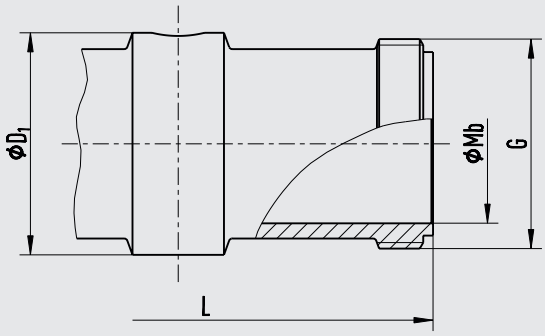

Union nut

14310972.01

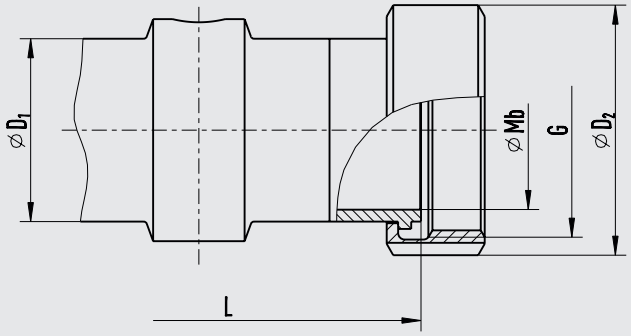

Legend:

L	Insertion length
D_1	Outer diameter of diaphragm seal
Mb	Effective diameter of diaphragm
D_2	Outer diameter of union nut

DN	PN 2)	G	Dimensions in mm [in]				
			Pipe outer Ø x wall thickness	L	D_1	Mb	D_2
1"	40	1" IDF	25 x 1.2 [0.984 x 0.047]	114 [4.488]	40 [1.575]	22.6 [0.89]	48 [1.89]
1 ½"	40	1 ½" IDF	38 x 1.2 [1.496 x 0.047]	146 [5.748]	55 [2.165]	35.6 [1.402]	64 [2.52]
2"	40	2" IDF	51 x 1.2 [2.008 x 0.047]	156 [6.142]	68 [2.677]	48.6 [1.913]	77 [3.032]
2 ½"	25	2 ½" IDF	63.5 x 1.2 [2.5 x 0.047]	156 [6.142]	80 [3.15]	60.3 [2.374]	91 [3.583]
3"	25	3" IDF	76.1 x 1.6 [2.996 x 0.063]	156 [6.142]	95 [3.74]	72.9 [2.87]	106 [4.173]

1) 3-A compliant (only in combination with a sealing with support ring per ISO 2853)
2) The specification PN in accordance with the above-mentioned standards is used exclusively for the classification of the connection. The maximum allowable pressure PS within the meaning of the Pressure Equipment Directive 2014/68/EU is independent of this and is marked on the diaphragm seal.

OBSOLETE

Model 981.21, threaded connection following APV-RJT standard (BS 4825 part 5)

Pipe standard: Pipes per BS 4825 part 1 or O.D. tube

Threaded coupling

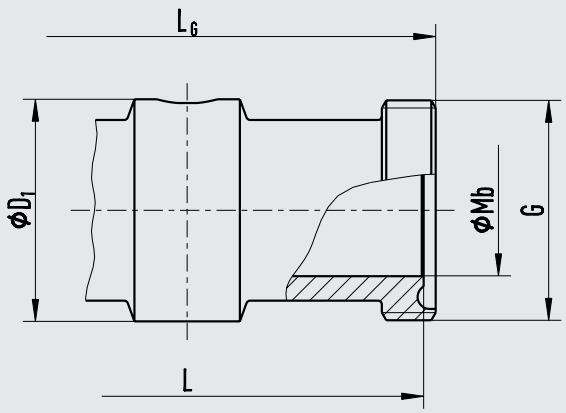

14311239.01

Union nut

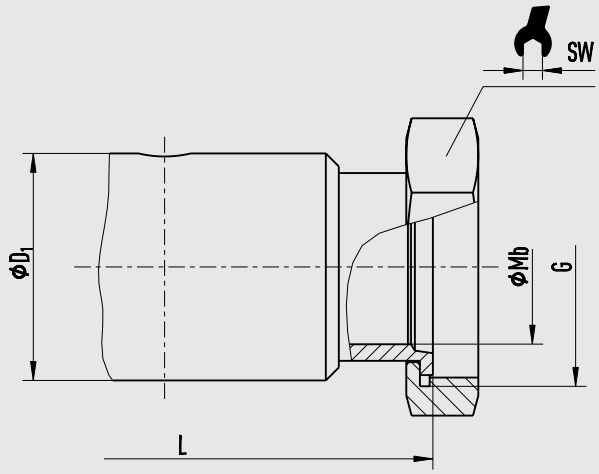

14311238.01

Legend:

L	Insertion length
D_1	Outer diameter of diaphragm seal
Mb	Effective diameter of diaphragm
L_G	Overall length

DN	PN [1]	G	Dimensions in mm [in]					
			Pipe outer Ø x wall thickness	L	D_1	Mb	L_G	SW
1"	40	1 13/16 x 8"	25.4 x 1.6 [1 x 0.063]	123.4 [4.858]	47 [1.85]	22.2 [0.874]	-	50 [1.969]
1 ½"	40	2 5/16 x 8"	38.1 x 1.6 [1.5 x 0.063]	155.4 [6.118]	59 [2.323]	34.9 [1.374]	152 [5.984]	65 [2.559]
2"	40	2 7/8 x 6"	50.8 x 1.6 [2 x 0.063]	167 [6.575]	74 [2.913]	47.6 [1.874]	165.4 [6.512]	80 [3.15]
2 ½"	25	3 3/8 x 6"	63.5 x 1.6 [2.5 x 0.063]	165.4 [6.512]	86 [3.386]	60.3 [2.374]	-	92 [3.622]
3"	25	3 7/8 x 6"	76.2 x 1.6 [3 x 0.063]	165.4 [6.512]	99 [3.898]	73 [2.874]	-	105 [4.134]

1) The specification PN in accordance with the above-mentioned standards is used exclusively for the classification of the connection. The maximum allowable pressure PS within the meaning of the Pressure Equipment Directive 2014/68/EU is independent of this and is marked on the diaphragm seal.

OBSOLETE

Ordering information

Diaphragm seal:

Diaphragm seal model / Process connection (type of process connection, pipe standard, pipe dimension) / Material (base body, diaphragm) / Surface roughness of wetted parts / Sealing / Zero point stabilisation (ZPS) / Connection to the measuring instrument / Level of cleanliness of wetted parts / Origin of wetted parts / Certificates

Diaphragm seal system:

Diaphragm seal model / Process connection (type of process connection, pipe standard, pipe dimension) / Material (base body, diaphragm) / Surface roughness of wetted parts / Sealing / Zero point stabilisation (ZPS) / Pressure measuring instrument model (per data sheet) / Mounting (direct mounting horizontal/vertical, cooling element horizontal/vertical, capillary) / min. and max. process temperature / min. and max. ambient temperature / Vacuum service / System fill fluid / Certificates / Height difference / Level of cleanliness of wetted parts / Origin of wetted parts / Instrument mounting bracket

© 12/2003 WIKA Alexander Wiegand SE & Co. KG, all rights reserved.
The specifications given in this document represent the state of the art at the time of publishing.
We reserve the right to make modifications to the specifications and materials.

WIKA Alexander Wiegand SE & Co. KG
Alexander-Wiegand-Straße 30
63911 Klingenberg/Germany
Tel. +49 9372 132-0
info@wika.de
www.wika.de