Compact diaphragm seal system
Hygienic design, with IO-Link and switching outputs
Model DSSA11SA

For further approvals,
see page 9

Applications

- Hygienic pressure measurement
- Production plants for the food and pharmaceutical industry
- For use in UHT plants and separators
- For the monitoring of processes with sterile steam

Special features

- Compact design with flush diaphragm
- Materials suitable for contact with food
- Clamp connection easy to open for cleaning and seal replacement
- Suitable for SIP and CIP
- Latest IO-Link specification: Version 1.1

Fig. left: Metal version
Fig. right: Version with 360° LED status indication

Description

The model DSSA11SA compact diaphragm seal system is particularly well suited for hygienic process integration in sanitary applications.

The model DSSA11SA meets the requirements of CIP (Cleaning in Place) and SIP (Sterilisation in Place) and withstands the temperatures of the cleaning steam.

The clamp connection (TRI-CLAMP®) enables the quick and easy dismounting and thus a simple cleaning with seal replacement.

In the basic version, the instrument is fitted with a pressure sensor without a display, which, depending on the application, can be used either for pressure monitoring or as an electronic PNP/NPN switch for process control.

With an additional IO-Link interface, the instrument can be programmed flexibly and has integrated diagnostic functions that monitor the instrument status. In addition, this allows the digital signal to be configured externally and conveniently at any time.

This version, which has been enhanced with a 360° LED status indication, provides visual information about the status and enables intuitive and quick error detection and correction. For maintenance, a blinking function via IO-Link facilitates the clear localisation of a diaphragm seal system. The blinking function prevents confusion of measuring locations and accelerates maintenance.

Smart in sensing

Data sheets showing similar products:
High-quality pressure sensor with mounted diaphragm seal, with clamp connection; model DSS22T; see data sheet DS 95.08

Overview of versions

Specification	Case version		
	Circular connector M12 x 1		Angular connector DIN 175301-803 A
	4-pin	Metal, 4-pin	3-pin
Ingress protection (IP code) per IEC 60529	IP65 and IP67	IP65 and IP67	IP65
EHEDG-certified	x	x	x
3-A-compliant	-	x	-
Selectable specification			
360° LED status indication	x	-	x
IO-Link	x	x	-
Teach function	x	x	-
Number of switching outputs	■ 1 ■ 2	■ 1 ■ 2	1

→ For available combinations of signal types, see page 6

Functionality

The flush diaphragm at the process connection of the diaphragm seal system transmits the process pressure via an FDA-compliant system fill fluid to the pressure sensor.

Visual feedback with 360° LED status indication makes maintenance tasks easier

A 360° LED status indication provides visual information about the status. The green (OK), yellow (critical state) or red (error) signal enables intuitive and fast error detection and correction. For maintenance, a blinking function via IO-Link facilitates the clear localisation of a diaphragm seal system. Confusion is prevented and maintenance is accelerated.

Security in digital networking with IO-Link

Thanks to IO-Link, the model DSSA11SA diaphragm seal system is ideal for use in intelligent machines. To ensure precise measuring results over the long term, the instrument has integrated diagnostic functions that monitor the instrument status. In addition, the diaphragm seal system can be configured externally and conveniently via the digital signal and adjusted at any time.

Teach function for switch points

In addition to the IO-Link, the Teach function enables a further on-site configuration of the switch point if a convenient factory setting of the point is not possible.

Switch point setting

A customer-specific switch point setting can be defined when ordering. If no additional ordering information is provided, the factory setting is set for switching at the full scale value and for switching back at 90 % of the full scale value. The switch point setting can only be subsequently parameterised for diaphragm seal systems with an IO-Link interface or Teach function.

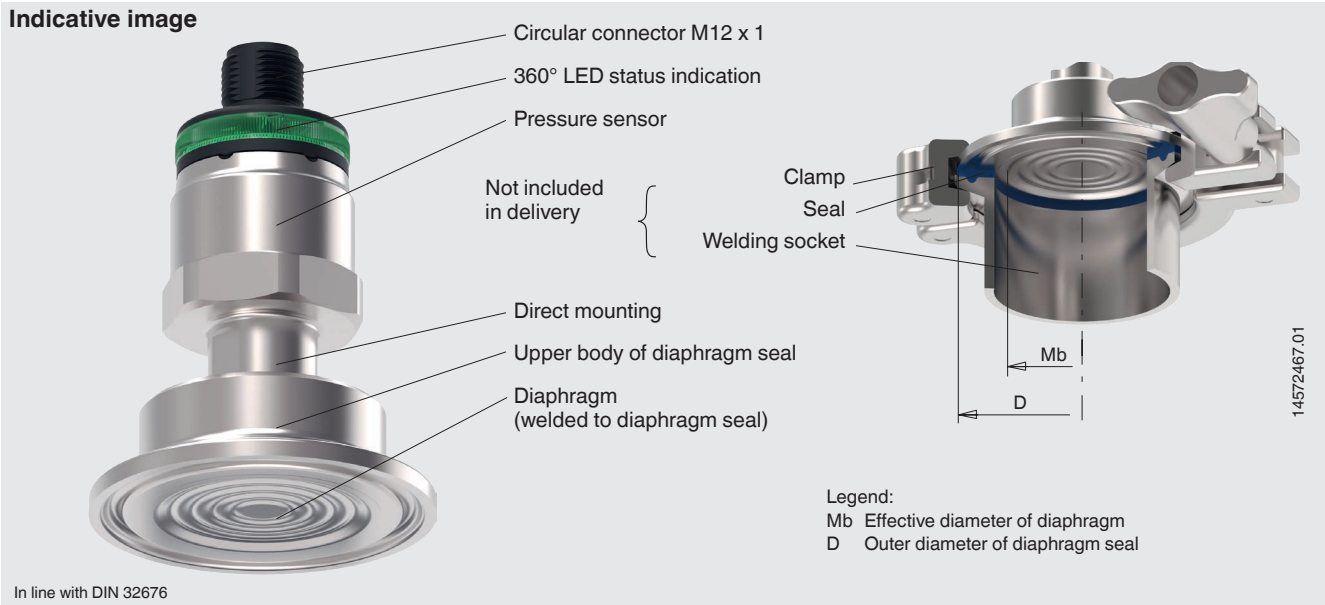

Technical information

Data sheet number	Title
IN 00.06	Diaphragm seals and diaphragm seal systems, application - functionality - design
IN 00.41	Specifications of oil- and grease-free instruments

→ See download on the WIKA website

Specifications

Basic information	
Version	Compact diaphragm seal system, hygienic design, with IO-Link and switching outputs
Mounting type	Direct mounting
System fill fluid	■ KN 59: FDA 21 CFR 172.856, 21 CFR 174.5 ■ KN 92: FDA 21 CFR 172.878, 21 CFR 178.3620(a); USP, EP
	USP = United States Pharmacopeia EP = European Pharmacopoeia

Accuracy specifications	
Accuracy, switching output [1]	■ ≤ ±1 % of span ■ ≤ ±0.5 % of span
Zero point setting	Max. 3 % of span (via IO-Link)
Temperature error [2]	≤ ±1.5 % of span
	≤ ±2.5 % of span for increased overload safety
Mean temperature coefficient [2]	
Zero point	≤ ±0.16 % of span/10 K
Span	≤ ±0.16 % of span/10 K
Switching current dependency	
With switching currents greater than 50 mA	≤ ±0.05 % per 50 mA with additional applied switching current
Versions without Teach function, LED status indication and IO-Link	≤ ±0.075 % per 50 mA with additional applied switching current
Reference conditions per IEC 61298-1	
Ambient temperature	23 °C ±2 °C [73 °F ±7 °F]
Atmospheric pressure	860 ... 1,060 mbar [86 ... 106 kPa, 12.5 ... 15.4 psi]
Air humidity	45 ... 75 % r. h.
Mounting position	Vertical, diaphragm points downward
Supply voltage	DC 10…32 V

1) Including non-linearity, hysteresis, zero offset and end value deviation (corresponds to measured error per IEC 61298-2).
2) Valid for the medium and ambient temperature ranges specified on page 8 and DN 1 ½" process connection in accordance with the DIN 11866 row C pipe standard or ASME BPE

Measuring ranges, gauge pressure

bar	
0 ... 1	0 ... 10
0 ... 1.6	0 ... 16
0 ... 2.5	0 ... 25
0 ... 4	0 ... 40
0 ... 6	

psi	
0 ... 15	0 ... 160
0 ... 25	0 ... 200
0 ... 30	0 ... 300
0 ... 50	0 ... 500
0 ... 100	

Measuring ranges, absolute pressure

bar	
0 ... 1	0 ... 6
0 ... 1.6	0 ... 10
0 ... 2.5	0 ... 16
0 ... 4	0 ... 25

psi	
0 ... 15	0 ... 100
0 ... 25	0 ... 160
0 ... 30	0 ... 200
0 ... 50	0 ... 300

Vacuum and compound measuring ranges

bar	
-1 ... 0	-1 ... +3
-1 ... +0.6	-1 ... +5
-1 ... +1.5	-1 ... +9

psi	
-14.5 ... 0	-14.5 ... +50
-14.5 ... +15	-14.5 ... +100
-14.5 ... +30	-14.5 ... +160

Further details on: Measuring range		
Units	bar, psi, kg/cm^2, kPa, MPa	
Special measuring ranges	Special measuring ranges are available on request. Special measuring ranges have a reduced long-term stability and higher temperature errors.	
Overpressure limit [1]	The overpressure limit is based on the sensor element used and the selected process connection.	
Measuring range ≤ 16 bar [200 psi]	■ 1.43 times ■ 2 times	
Measuring range 0 ... 25 bar [300 psi]	■ 1.43 times ■ 2 times (only for versions with PN 40)	
Measuring range 0 ... 40 bar [500 psi]	1.43 times (only for versions with PN 40)	
Vacuum resistance	Yes	
LED status indication	■ With ■ Without	
Visibility	360°	
Colours	Green	Operation
	Yellow	Warning
	Red	Fault

1) The parts not included in delivery (clamp and seal) must be included in the assessment of the overpressure limit.

Process connection				
Standard				
Clamp connection per DIN 32676	■ Pipe standard per DIN 11866 row B and ISO 1127 row 1 ■ Pipe standard per DIN 11866 row C or ASME BPE			
Clamp connection per BS 4825 part 3	Pipe standard per BS 4825 part 3 and O.D. tube			
Size				
Pipe standard per DIN 11866 row B and ISO 1127 row 1	■ DN 26.9 ■ DN 60.3	■ DN 33.7 ■ DN 76.1	■ DN 42.4	■ DN 48.3
Pipe standard per DIN 11866 row C or ASME BPE	■ DN 1" ■ DN 3"	■ DN 1 ½"	■ DN 2"	■ DN 2 ½"
Pipe standard per BS 4825 part 3 and O.D. tube	■ DN 25.4 ■ DN 76.2	■ DN 38.1	■ DN 50.8	■ DN 63.5

Output signal	
Signal type	
IO-Link	■ With ■ Without
	The switching thresholds for switch point 1 and switch point 2 are individually adjustable via IO-Link. In addition, the switching function, contact function and damping can be configured via IO-Link.
Switching output 1	■ PNP ■ NPN
	The switching threshold and contact function can be adjusted on site for versions with Teach function. This eliminates the need for switching output 2.
Switching output 2	■ Without ■ PNP ■ NPN
Switching function	■ Hysteresis ■ Window
Contact function	■ Normally closed ■ Normally open
Damping, switching output	0 ms ... 65 s

Output signal		
Switching current	Max. 250 mA, see “Derating curve per switching output”, page 6	
Switching voltage	Supply voltage - 1 V	
Supply voltage		
Supply voltage	DC 10 ... 32 V	
Current supply	With one switching output	≤ 0.3 A incl. switching current
	With two switching outputs	≤ 0.6 A incl. switching current
Current consumption	≤ 25 mA	
Communication		
Communication protocol	Revision	IO-Link 1.1
	Transmission rate	38.4 kBaud (COM2)
	Min. cycle time	2.3 ms
	Master port class	A
Dynamic behaviour		
Switch-on time	1 s	
Response time of switching output	≤ 5 ms	

Available combinations of signal types				Connection type of connector	
Switching output		IO-Link 1.1	Teach	3-pin	4-pin
SP1	SP2				
PNP	-	-	-	x	x
NPN	-	-	-	x	x
PNP	-	x	-	-	x
PNP	-	-	x	-	x
NPN	-	-	x	-	x
PNP	PNP	-	-	-	x
PNP	PNP	x	-	-	x
NPN	NPN	-	-	-	x

Derating curve per switching output

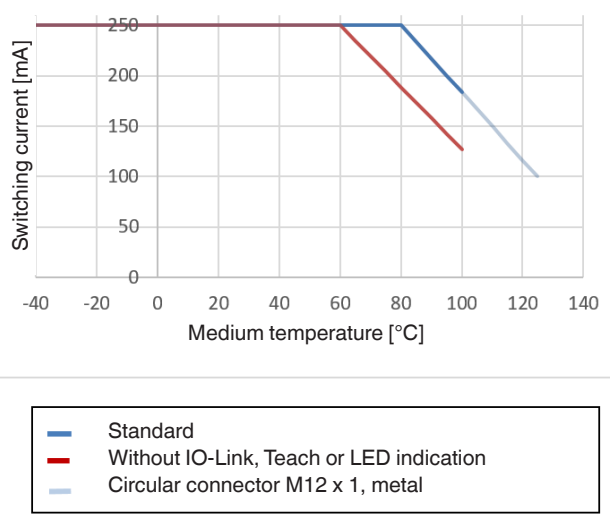

Electrical connection	
Connection type	**Ingress protection (IP code) per IEC 60529 [1)]**
Circular connector M12 x 1, metal, 4-pin	IP65 and IP67
Circular connector M12 x 1, 4-pin	
With LED status indication	IP65 and IP67
Without LED status indication	IP65 and IP67
Angular connector DIN 175301-803 A, 3-pin [2)]	
With LED status indication	IP65
Without LED status indication	IP65

1) The stated IP codes only apply when plugged in using mating connectors that have the appropriate IP code.
2) Only available without IO-Link and without Teach function

Further details on: Electrical connection	
Short-circuit resistance	SP1 / SP2 vs. U-
Reverse polarity protection	U+ vs. U-
Insulation voltage	DC 500 V
Overvoltage protection	DC 36 V

Pin assignment

Circular connector M12 x 1, 4-pin

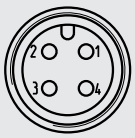

U+	1
U-	3
SP1 / C	4
SP2 / Teach	2

Angular connector DIN 175301-803 A, 3-pin

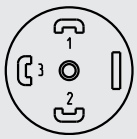

U+	1
U-	2
SP1	3

Legend:

U+	Positive power supply terminal
U-	Negative power supply terminal
SP1	Switching output 1
SP2	Switching output 2
C	Communication with IO-Link
Teach	Teach input for switching output/switching function

Material	
Material of wetted parts	Stainless steel 1.4435 (316L)
Origin of wetted parts	■ International ■ Exclusively from EU, CH, GB
Level of cleanliness of wetted parts	■ Oil- and grease-free per WIKA specification (< 1,000 mg/m²) ■ Oil- and grease-free per ASTM G93-03 level D (< 220 mg/m²) ■ Oil- and grease-free per ASTM G93-03 level C (< 66 mg/m²)
Surface roughness of wetted parts	Ra ≤ 0.76 µm [30 µin] per ASME BPE SF3 (except for weld seam)
	Other surface qualities on request
Material in contact with the environment	
Case	Stainless steel 316L
Circular connector M12 x 1, metal	Stainless steel 316L
Circular connector M12 x 1	PBT GF30
LED status indication	PC

Operating conditions	
Medium temperature range	
System fill fluid KN 59	-35 ... +150 °C [-31 ... +302 °F]
System fill fluid KN 92	-15 ... +150 °C [5 ... 302 °F]
CIP and SIP process	Max. 150 °C [302 °F], long term
Ambient temperature range	0 ... 40 °C [32 ... 104 °F] [1)]
Storage temperature range	-35 ... +70 [-31 ... +158 °F]
Relative humidity	45 ... 75 % r. h.
Vibration resistance per IEC 60068-2-6	25 g, 10 ... 2,000 Hz (under resonance)
Shock resistance per IEC 60068-2-27	■ 100 g, 6 ms (IEC 60068-2-27, mechanical) ■ 1,000 g, 1 ms (IEC 60068-2-27, mechanical) [2)]
Mounting position	As required
Ingress protection (IP code) per IEC 60529	→ See table “Electrical connection”, page 7

1) Depending on the selected system fill fluid
2) Only for circular connector M12 x 1, metal version

Approvals

Logo	Description	Region
CE	**EU declaration of conformity**	European Union
	EMC directive	
	RoHS directive	
3-A®	**3-A** [1] Hygienic design This instrument is 3-A marked, based on a third party verification for conformance to the 3-A standard.	USA
CERTIFIED EHEDG TYPE EL CLASS I	**EHEDG** Hygienic design	European Union

1) 3-A-conformity only for circular connector M12 x 1, metal version

Manufacturer’s declaration

Logo	Description
-	China RoHS directive
-	Manufacturer's declaration regarding regulations (EC) 1935/2004 and (EC) 2023/2006 (GMP)
-	Suitability of wetted materials for drinking water in accordance with the European 4MS initiative
-	In accordance with EMEA/410/01 free from substances of animal origin (ADI-free)
-	Manufacturer's declaration GB 4806.1-2016 China National Food Safety Standard - Good Manufacturing Practice GB 31603-2015 (GMP)

Certificates

Certificates	
Certificate	■ 3.1 inspection certificate per EN 10204 (e.g. material proof for wetted metal parts, indication accuracy, calibration certificate) ■ 2.2 test report per EN 10204 (e.g. state-of-the-art manufacturing, material proof, indication accuracy) - FDA conformity of the system fill fluid - 3-A conformity of the diaphragm seal, based on a third party verification - EHEDG conformity

→ For approvals and certificates, see website

Dimensions in mm [in]

Circular connector M12 x 1 with LED status indication

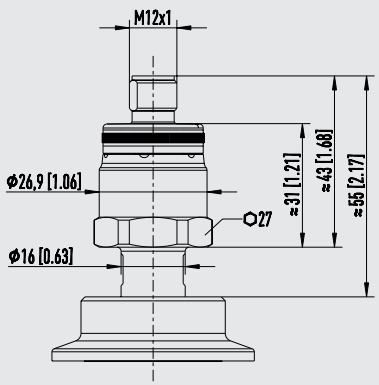

Weight: approx. 220 g [7.8 oz]

Circular connector M12 x 1, metal version

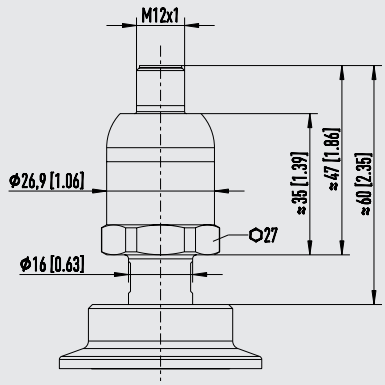

Weight: approx. 260 g [9.2 oz]

Angular connector DIN 175301-803 A with LED status indication

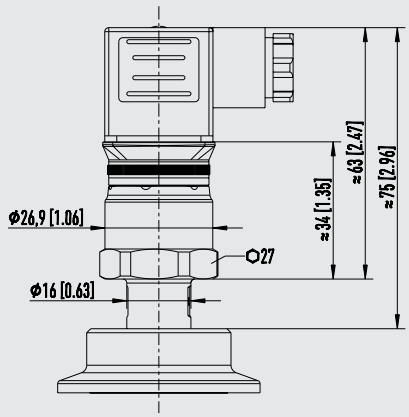

Weight: approx. 260 g [9.2 oz]

The total height of the respective instrument version can be determined by adding dimension h of the clamp connection (see below). The weight of the diaphragm seal system is dependent on the selected process connection.

Clamp connection per DIN 32676

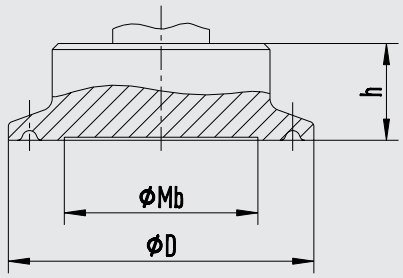

14572502.01

Process connection: Clamp connection per DIN 32676
Pipe standard per DIN 11866 row B and ISO 1127 row 1

DN	PN [1]	Dimensions in mm [in]				
		For pipe outer Ø x wall thickness	Pipe inner Ø	D	Mb	h
26.9	40	26.9 x 1.6 [1.059 x 0.063]	23.7 [0.933]	50.5 [1.988]	22 [0.866]	16 [0.63]
33.7	40	33.7 x 2 [1.327 x 0.079]	29.7 [1.169]	50.5 [1.988]	25 [0.984]	16 [0.63]
42.4	40	42.4 x 2 [1.669 x 0.079]	38.4 [1.512]	64 [2.52]	32 [1.26]	16 [0.63]
48.3	40	48.3 x 2 [1.902 x 0.079]	44.3 [1.744]	64 [2.52]	40 [1.575]	16 [0.63]
60.3	40	60.3 x 2 [2.374 x 0.079]	56.3 [2.217]	77.5 [3.051]	52 [2.047]	16 [0.63]
76.1	25	76.1 x 2 [2.996 x 0.079]	72.1 [2.839]	91 [3.583]	60 [2.362]	16 [0.63]

1) Maximum nominal pressure rating in bar. For the actual operating conditions, the correct seal and clamp must be used.

Further dimensions and higher nominal pressures on request

Clamp connection per DIN 32676

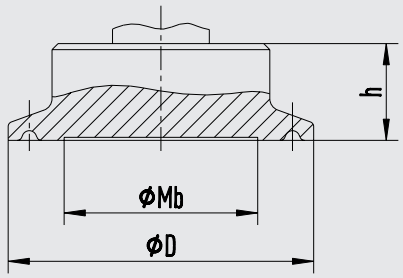

14572502.01

Process connection: Clamp connection per DIN 32676
Pipe standard per DIN 11866 row C or ASME BPE

DN	PN [1]	Dimensions in mm [in]				
		For pipe outer Ø x wall thickness	Pipe inner Ø	D	Mb	h
1"	40	25.4 x 1.65 [1 x 0.065]	22.1 [0.87]	50.5 [1.988]	22 [0.866]	16 [0.63]
1 ½"	40	38.1 x 1.65 [1.5 x 0.065]	34.8 [1.37]	50.5 [1.988]	32 [1.26]	16 [0.63]
2"	40	50.8 x 1.65 [2 x 0.065]	47.5 [1.87]	64 [2.52]	40 [1.575]	16 [0.63]
2 ½"	40	63.5 x 1.65 [2.5 x 0.065]	60.2 [2.37]	77.5 [3.051]	52 [2.047]	16 [0.63]
3"	25	76.2 x 1.65 [3 x 0.065]	72.9 [2.87]	91 [3.583]	60 [2.362]	16 [0.63]

1) Maximum nominal pressure rating in bar. For the actual operating conditions, the correct seal and clamp must be used.

Further dimensions and higher nominal pressures on request

Clamp connection per BS 4825 part 3

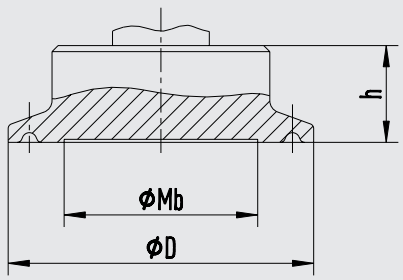

14572502.01

Process connection: Clamp connection per BS 4825 part 3
Pipe standard per BS 4825 part 3 and O.D. tube

DN	PN [1]	Dimensions in mm [in]				
		For pipe outer Ø x wall thickness	Pipe inner Ø	D	Mb	h
25.4	40	25.4 x 1.6 [1 x 0.063]	22.2 [0.874]	50.5 [1.988]	22 [0.866]	16 [0.63]
38.1	40	38.1 x 1.6 [1.5 x 0.063]	34.9 [1.374]	50.5 [1.988]	32 [1.26]	16 [0.63]
50.8	40	50.8 x 1.6 [2 x 0.063]	47.6 [1.874]	64 [2.52]	40 [1.575]	16 [0.63]
63.5	40	63.5 x 1.6 [2.5 x 0.063]	60.3 [2.374]	77.5 [3.051]	52 [2.047]	16 [0.63]
76.2	25	76.2 x 1.6 [3 x 0.063]	73 [2.874]	91 [3.583]	60 [2.362]	16 [0.63]

1) Maximum nominal pressure rating in bar. For the actual operating conditions, the correct seal and clamp must be used.

Further dimensions and higher nominal pressures on request

Accessories

Model	Description	Order number
IO-LINK USB-MASTER	For testing and parameterising IO-Link sensors. Additionally included in delivery: ■ Power supply unit AC 115/230 V - Output: DC 24 V (1 A) with international adapters ■ PC software: IO-Link Device Tool – Standard Edition	14239506

Connectors with moulded cable					
Model	**Description**	**Temperature range**	**Cable diameter**	**Cable length**	**Order number**
	Straight version, cut to length, 4-pin, PUR cable, UL listed, IP67	-20 ... +80 °C [-4 ... +176 °F]	4.5 mm [0.18 in]	2 m [6.6 ft]	14086880
				5 m [16.4 ft]	14086883
				10 m [32.8 ft]	14086884
	Angled version, cut to length, 4-pin, PUR cable, UL listed, IP67	-20 ... +80 °C [-4 ... +176 °F]	4.5 mm [0.18 in]	2 m [6.6 ft]	14086889
				5 m [16.4 ft]	14086891
				10 m [32.8 ft]	14086892
	Connection cable, 4-pin, PUR cable, UL listed, IP67 1x LED green, 2x LED yellow	-20 ... +80 °C [-4 ... +176 °F]	4.5 mm [0.18 in]	2 m [6.6 ft]	14252834
				5 m [16.4 ft]	14252835

TRI-CLAMP® is a trademark of the company Alfa Laval AB SE

Ordering information

Case version / System fill fluid / Process connection (pipe standard, size) / Output signal / Electrical connection / Medium temperature range / Ambient temperature range / Vacuum service / Origin of wetted parts / Level of cleanliness of wetted parts / Certificates / Accessories

© 05/2023 WIKA Alexander Wiegand SE & Co. KG, all rights reserved.
The specifications given in this document represent the state of engineering at the time of publishing.
We reserve the right to make modifications to the specifications and materials.

WIKA Alexander Wiegand SE & Co. KG
Alexander-Wiegand-Straße 30
63911 Klingenberg/Germany
Tel. +49 9372 132-0
info@wika.de
www.wika.de