Temperature dry-well calibrator Premium version Model CTD9350

WIKA data sheet CT 41.39

Applications

- Bio and pharmaceutical industries
- Food industry
- Power plants and plant construction
- Measurement and control laboratories in the chemical industry
- Demanding calibrations in production and laboratory

Special features

- Easy operation via intuitive, user-friendly menus
- Large, easy-to-read touchscreen
- Short response times due to optimised control
- Improved accuracy due to homogeneous dry-well temperature
- Creation of calibration tasks incl. preparation of a certificate

Fig. left: with integrated measuring instrument
Fig. right: without measuring instrument

Description

Range of applications
Whether in laboratories, workshops or on-site, the CTD9350 series of temperature dry-well calibrators can meet any calibration requirement. All instruments can be fitted with an integrated measuring instrument. This enables resistances, thermoelectric voltages and current signals from thermometers with 0/4 ... 20 mA transmitters to be recorded and displayed directly in °C.

Four versions from -50 ... +700 °C [-58 ... +1,292 °F]
The temperature dry-well calibrators are matched to five temperature ranges. The CTD9350-165 has a range of -35 ... +165 °C [-31 ... +329 °F], the CTD9350-165-X also offers a larger insert of 60 mm [2.36 in].

If a larger measuring range is required, the CTD9350-COOL is the right choice. The range -50 ... +200 °C [-58 ... +392 °F] is optimal for the biotechnology as well as the pharmaceutical and food industries.

Above 40 °C [104 °F] are used: the CTD9350-450 and CTD9350-700 with a limit temperature of 450 °C [842 °F] and 700 °C [1,292 °F], with the CTD9350-450 offering a larger measuring insert.

All instruments are fitted with dry wells for large inserts.

Smart in sensing

Data sheets showing similar products:
Temperature dry-well calibrator; models CTD9100-xxx; see data sheet CT 41.28
Temperature multi-function calibrator; model CTM9100-150; see data sheet CT 41.40
Temperature multi-function calibrator; model CTM9350-165; see data sheet CT 41.41

Easy calibration, with automatic certificate generation
The operation of the instruments using the large touchscreen is very simple and intuitive. With the instrument's software, calibration tasks can easily be created to simplify the calibration process for the user as much as possible. With this, automatic calibrations can be performed after adding a test item and the desired measuring points. The measured value can be recorded with the integrated measuring instrument manually or with an optional USB camera. At the end of the process, the instrument's own software generates a calibration certificate.

Increase productivity
Since, in a large number of processes, the time factor is important, an actual time calculation is carried out and the change time is displayed each time the temperature values change. This gives the user a better overview of their heating and cooling times.

Stable, homogeneous dry-well temperature
Due to a controller, which has been specifically developed for temperature calibration, and a special heating block for temperatures to 700 °C [1,292 °F], a high control accuracy and a homogeneous temperature distribution within the block is achieved. Important features in this context are control algorithms, which have been optimised for the calibration processes, and a heating block with a heating power that increases towards the upper end. The small resulting temperature fluctuations and the good axial temperature distribution lead to a considerably reduced total measurement uncertainty during calibration.

Overview of versions of the models CTD9350

Four instruments for the temperature range from -50 ... +700 °C [-58 ... +1,292 °F]

Model CTD9350-COOL
Temperature range from -50 ... +200 °C [-58 ... +392 °F]
Model CTD9350-165
Temperature range from -35 ... +165 °C [-31 ... +329 °F]

These calibrators work with Peltier elements and can therefore also reach test temperatures below the ambient temperature. Due to their ability to actively cool, they are more commonly used in the biotechnology, pharmaceutical and food industries.

Model CTD9350-165-X
Temperature range from -30 ... +165 °C [-31 ... +329 °F]

The version CTD9350-165-X has an enlarged insert with Ø 60 mm [2.36 in]. This makes it possible to calibrate several temperature probes simultaneously without having to change the inserts.

Model CTD9350-450
Temperature range from +40 ... +450 °C [+104 ... +842 °F]

The CTD9350-450 is used in the medium temperature range up to 450 °C [842 °F]. It generates its temperature with an electrical resistance heating and has an enlarged insert with Ø 60 mm [2.36 in]. This makes it possible to calibrate several temperature probes simultaneously without having to change the inserts.

Model CTD9350-700
Temperature range from +40 ... +700 °C [+104 ... +1,292 °F]

This is the high-temperature version. This also uses an electrical resistance heater. When it comes to testing at high temperatures, such as for exhaust gases measurements on test benches or in power generation, the model CTD9350-700 is the right choice.

Specifications of the temperature dry-well calibrator

Basic information		
Temperature range	Model CTD9350-COOL	-50 ... +200 °C [-58 ... +392 °F]
	Model CTD9350-165	-35 ... +165 °C [-31 ... +329 °F]
	Model CTD9350-165-X	-30 ... +165 °C [-22 ... +329 °F]
	Model CTD9350-450	T_{amb} ... 450 °C [T_{amb} ... 842 °F]
	Model CTD9350-700	T_{amb} ... 700 °C [T_{amb} ... 1,292 °F]
Temperature stability	Determined in accordance with current calibration guideline in a standard insert. → See table „Accuracy specifications“	
Temperature control	→ See table „Tempering“	
Insert		
Dimension of the insert	Model CTD9350-COOL Model CTD9350-165	Ø 28 x 150 mm [Ø 1.10 x 5.91 in]
	Model CTD9350-165-X	■ Ø 60 x 163 mm [Ø 2.36 x 6.42 in] ■ Ø 60 x 152 mm [Ø 2.36 x 5.98 in] Air Shield
	Model CTD9350-450	■ Ø 60 x 150 mm [Ø 2.36 x 5.91 in] ■ Ø 60 x 152 mm [Ø 2.36 x 5.98 in] Air Shield
	Model CTD9350-700	Ø 29 x 144 mm [Ø 1.14 x 5.67 in]
Immersion depth	Model CTD9350-COOL Model CTD9350-165 Model CTD9350-165-X Model CTD9350-450	145 mm [5.71 in]
	Model CTD9350-700	139 mm [5.47 in]
Material	Model CTD9350-COOL Model CTD9350-165	Brass 2.0375
	Model CTD9350-165-X Model CTD9350-450	Aluminium 3.4365
	Model CTD9350-700	Aluminium-bronze 2.0966

Basic information		
Digital display instrument		
Display	Colour touchscreen (7”), laminated safety glass	
Display range	-199.9 ... +999.9 °C [-199.9 ... +999.9 °F]	
Resolution	0.001 °C	
Units	°C, °F, K	
Menu language	English German	
Functions		
Menu functions	Calibration without certificate Calibration with automatic certificate generation Remote control Data export to a USB stick	
User settings	User-defined data is indicated on the test certificate	
Dimensions (W x D x H)		
Calibrator without carrying handle	210 x 300 x 380 mm [8.27 x 11.81 x 14.96 in]	
Height of carrying handle	50 mm [1.97 in]	
Weight	Model CTD9350-COOL	Approx. 15 kg [33.1 lb]
	Model CTD9350-165 Model CTD9350-165-X	Approx. 13.5 kg [29.77 lb]
	Model CTD9350-450	11 kg [24.26 lb]
	Model CTD9350-700	10 kg [22.1 lb]

Accuracy specifications					
Model	**CTD9350-COOL**	**CTD9350-165**	**CTD9350-165-X**	**CTD9350-450**	**CTD9350-700**
Temperature range	-50 ... +200 °C [-58 ... +392 °F]	-35 ... +165 °C [-31 ... +329 °F]	-30 ... +165 °C [-22 ... +329 °F]	T_{amb} ... 450 °C [T_{amb} ... 842 °F]	T_{amb} ... 700 °C [T_{amb} ... 1,292 °F]
Measurements determined	Determined in accordance with current calibration guideline in a standard insert.				
Accuracy					
External reference and Air Shield insert	-	-	±0.070 K	±0.100 K	±0.100 K
External reference	±0.100 K	±0.070 K	±0.100 K	±0.150 K	**-**
Internal reference	±0.150 K	±0.100 K	±0.150 K	±0.200 K	±0.075 % of reading, min. ±0.300 K
Temperature stability					
External reference and Air Shield insert	-	-	±0.005 K	±0.010 K	±0.020 K
External reference	±0.003 K	±0.008 K	±0.010 K	±0.030 K	-
Internal reference	±0.020 K	±0.015 K	±0.010 K	±0.030 K	±0.100 K
Influence due to loading					
External reference and Air Shield insert	-	-	±0.010 K	±0.010 K	±0.020 K
External reference	±0.040 K	±0.010 K	±0.080 K	±0.010 K	-
Internal reference	±0.150 K	±0.300 K	±0.150 K	±0.200 K	±0.300 K
Temperature distribution – Axial homogeneity					
External reference and Air Shield insert	**-**	**-**	**±0.060 K**	**±0.100 K**	±0.300 K
External reference	±0.200 K	±0.050 K	**±0.200 K**	**±0.200 K**	-
Internal reference	±0.200 K	±0.050 K	**±0.200 K**	**±0.200 K**	±0.300 K

Accuracy specifications					
Model	**CTD9350-COOL**	**CTD9350-165**	**CTD9350-165-X**	**CTD9350-450**	**CTD9350-700**
Temperature distribution – Radial homogeneity					
External reference and Air Shield insert	**-**	**-**	**±0.010 K**	**±0.050 K**	±0.040 K
External reference	±0.050 K	±0.020 K	**±0.050 K**	**±0.050 K**	-
Internal reference	**±0.050 K**	±0.020 K	**±0.050 K**	**±0.050 K**	±0.040 K
Hysteresis					
External reference and Air Shield insert	**-**	**-**	**±0.004 K**	**±0.010 K**	±0.015 K
External reference	±0.010 K	±0.010 K	**±0.010 K**	**±0.010 K**	-
Internal reference	**±0.010 K**	**±0.010 K**	**±0.010 K**	**±0.030 K**	±0.015 K

Temperature control		
Measurements determined	When using the internal reference and without an insert	
Heating time		
Model CTD9350-COOL	From 20 °C to 200 °C [from +68 °F to +392 °F]	9 min
	From -50 °C to +200 °C [from -58 °F to +392 °F]	12 min
Model CTD9350-165	From 20 °C to 165 °C [from 68 °F to 329 °F]	14 min
	From -35 °C to +165 °C [from -31 °F to +329 °F]	16 min
Model CTD9350-165-X	From 20 °C to 165 °C [from 68 °F to 329 °F]	Approx. 30 min
	From -35 °C to +165 °C [from -31 °F to +329 °F]	Approx. 38 min
Model CTD9350-450	From +20 °C to +450 °C [from +68 °F to +842 °F]	Approx. 14 min
Model CTD9350-700	From 20 °C to 690 °C [from 68 °F to 1,274 °F]	19 min
Cooling time		
Model CTD9350-COOL	From +20 °C to -50 °C [from +68 °F to -58 °F]	35 min
	From 200 °C to 20 °C [from +392 °F to -68 °F]	18 min
Model CTD9350-165	From +20 °C to -30 °C [from +68 °F to -22 °F]	13 min
	From 165 °C to 20 °C [from 329 °F to 68 °F]	11 min
Model CTD9350-165-X	From +20 °C to -25 °C [from +68 °F to -13 °F]	Approx. 35 min
	From 165 °C to 20 °C [from 329 °F to 68 °F]	Approx. 17 min
Model CTD9350-450	From 450 °C to 100 °C [from +842 °F to +212 °F]	Approx. 60 min
Model CTD9350-700	From 700 °C to 30 °C [from 1,292 °F to 86 °F]	85 min
Stabilisation time	Time required to reaching a stable value. Depending on temperature and temperature probe	

Communication	
Interface	3 x USB Ethernet
Connectivity	OPC UA Serial communication HTTP
	→ Details and further possibilities on request
Baud rate	2400
Measuring rate	1 measured value per second
Internal program	Devices under test, test tasks and test points can be created without limit

Voltage supply and performance data				
Model	**CTD9350-COOL**	**CTD9350-165** **CTD9350-165-X**	**CTD9350-450**	**CTD9350-700**
Operating voltage	AC 90 ... 240 V, 50/60 Hz	AC 90 ... 240 V, 50/60 Hz	■ AC 90 ... 115 V, 60 Hz ■ AC 230 V, 50 Hz	■ AC 90 ... 115 V, 60 Hz ■ AC 230 V, 50 Hz Protective conductor (PE) must be available.
Power consumption	555 W	375 W	1,000 W	1,000 W
Fuse	Microfuse, slow blow 6.3 AH 250 V		Microfuse, slow blow 10 AH 250 V	
Power cord	■ Europe ■ USA/Canada ■ Switzerland ■ UK ■ China			

Operating conditions	
Place of use	For indoor use only
Operating altitude	≤ 2,000 m [≤ 6,562 ft] above sea level
Operating temperature	0 ... 50 °C [32 ... 122 °F] The ambient temperature influences the heating/cooling behaviour
Storage and transport temperature range	-10 ... +60 °C [14 ... 140 °F]
Humidity	< 80 % relative humidity to 31 °C [88 °F] Linear decreasing by up to 50 % relative humidity at 40 °C [104 °F]
Condensation	Non-condensing
Electrical safety	
Overvoltage category	II
Pollution degree per IEC 61010-1	2

Specifications for integrated measuring instrument

Output signal	
Analogue output	
Voltage supply	DC 24 V (can be activated via menu)
Load	Max. 24 mA
Switching function	NC, NO

Electrical connection	
Number of channels	
Resistance thermometer	2
Thermocouple	2
Current signal	1
Voltage signal	1
Switch test	2
Connection type	
Resistance thermometer	4 x 4 mm banana sockets
Thermocouple	2 x thermocouple terminal (mini)
Current and voltage signal	4 mm banana sockets

Electrical connection		
Pin assignment		
Resistance thermometer	2-wire connection 3-wire connection 4-wire connection	
Measuring range		
Resistance thermometer	Pt100	0 ... 400 Ω
	Pt1000	0 ... 4,000 Ω
Thermocouple	-10 ... +100 mV	
Current signal	DC 0 ... 24 mA	
Voltage signal	DC 0 ... 12 V	

Accuracy specifications	Measuring range	Accuracy
Resistance thermometer		
Pt100	-200 ... +850 °C [-328 ... +1,562 °F]	±0.03 K
Pt500	-200 ... +850 °C [-328 ... +1,562 °F]	±0.12 K
Pt1000	-200 ... +850 °C [-328 ... +1,562 °F]	±0.06 K
Ni100	-60 ... +180 °C [-76 ... +356 °F]	±0.02 K
Ni500	-60 ... +200 °C [-76 ... +392 °F]	±0.08 K
Ni1000	-60 ... +200 °C [-76 ... +392 °F]	±0.04 K
Cold junction	-200 ... +1,820 °C [-328 ... +3,308 °F]	±0.3 K
Thermocouple		
Type K	-160 ... +1,260 °C [-256 ... +2,300 °F]	±0.08 K
Type J	-190 ... +1,200 °C [-310 ... +2,192 °F]	±0.07 K
Type N	0 ... 1,300 °C [32 ... 2,372 °F]	±0.13 K
Type E	-200 ... +1,000 °C [-328 ... +1,832 °F]	±0.06 K
Type T	-130 ... +400 °C [-202 ... +752 °F]	±0.09 K
Type R	160 ... 1,760 °C [320 ... 3,200 °F]	±0.78 K
Type S	170 ... 1,760 °C [338 ... 3,200 °F]	±0.73 K
Type B	920 ... 1,820 °C [1,688 ... 3,308 °F]	±0.5 K
Direct current	0 ... 24 mA	0.01 % of end value
DC voltage	0 ... 12 V	0.01 % of end value

Approvals

Logo	Description	Region
CE	**EU declaration of conformity**	European Union
	EMC directive EN 61326 emission (group 1, class A) and immunity (industrial environments)	
	Low Voltage Directive EN 61010, safety requirements for electrical equipment for measurement, control and laboratory use	
	RoHS directive	

1) This is class A equipment for emitted interference and is intended for use in industrial environments. In other environments, e.g. in residential or commercial areas, it can interfere with other equipment under certain circumstances. In such circumstances the operator is expected to take the appropriate measures.

Certificates

Description	
Calibration	
Integrated measuring instrument	■ Without ■ 3.1 inspection certificate per EN 10204 for RTD, TC, mA and V ■ DAkkS calibration certificate for RTD, TC, mA and V
External reference thermometer	■ Without ■ 3.1 inspection certificate per EN 10204 ■ DAkkS calibration certificate (traceable and accredited in accordance with ISO/IEC 17025)
Instrument	■ 3.1 inspection certificate per EN 10204 ■ DAkkS calibration certificate (traceable and accredited in accordance with ISO/IEC 17025)
Recommended calibration interval	1 year (dependent on conditions of use)

→ For approvals and certificates, see website

Isometric views

View from the front

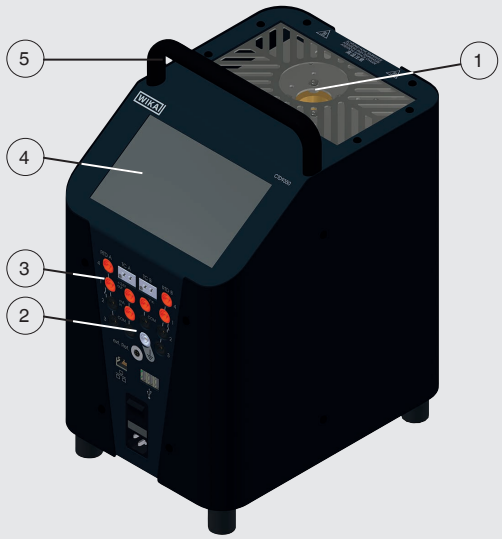

View from the rear

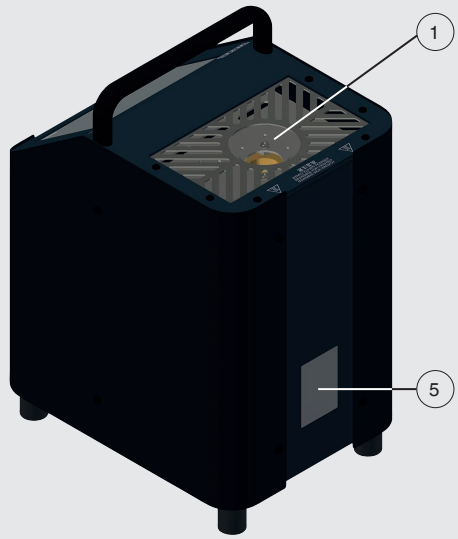

View from below, model CTD9350-165

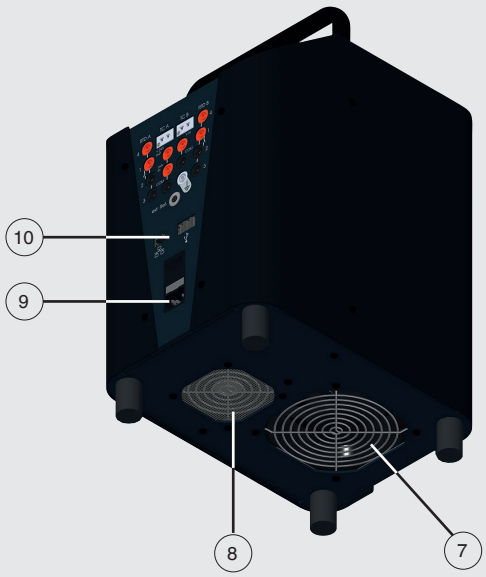

View from the rear, model CTD9350-700

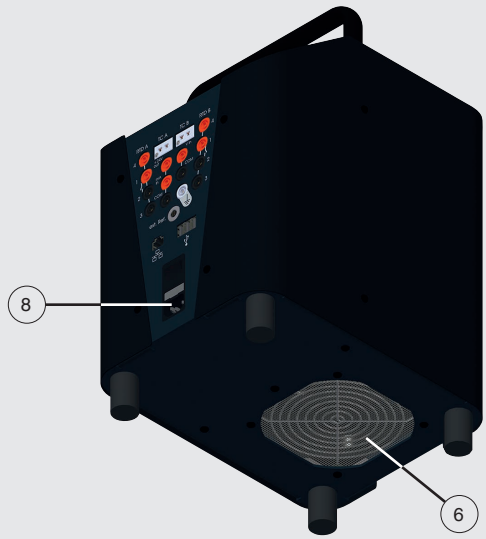

1. Temperature dry well
2. Connection for external reference sensor
3. Integrated measuring instrument
4. Digital indicator/display with touchscreen
5. Carrying handle
6. Product label
7. Fan 1: ventilation for temperature block cooling
8. Fan 2: ventilation for case cooling
9. Mains connection socket with main switch and microfuse
10. Interfaces for PC and network

Accessories and spare parts

Accessories for model CTD9350-xxxx		Order code [2]
Description [1]		CTX-A-Kx
	Transport case with trolley frame	-3-
	Insert replacement tool	-A-
	External reference probe up to max. 255 °C [528 °F] Dimension: Ø 3 x 300 mm [Ø 0.12 x 11.81 in] Angled: 190 mm [7.48 in] – length from sensor tip	-E-
	External reference probe up to max. 700 °C [1,292 °F] Dimension: Ø 4.5 x 300 mm [Ø 0.18 x 11.81 in]	-F-
	Insert for use as a temperature dry-well calibrator Dimension: depending on the calibrator model → Drilled inserts are selected with the order code in CTA9I-xx	-G-
	Power cord For the EU	-L-
	For Switzerland	-M-
	For UK	-N-
	For USA/Canada	-O-
	For China	-C-
	Electrical connection set Consisting of: ■ Clamp connectors (4 x red, 4 x black and 1 x white) ■ 2 x thermocouple adapters ■ 2 x split ferrite cores ■ 2 x ferrite keys	-P-
	PC and network cable	-Q-
Ordering information for your enquiry:		
	1. Order code: CTX-A-Kx **2. Option:**	⇓ **[ ]**

1) The figures are an example and may, depending on the state of the art, change in design, material composition and representation.
2) Order code changes depending on the calibrator model.

Overview of the inserts and their order codes

Model	Description	Order code
CTD9350-COOL	**Insert, standard** Dimension: Ø 28 x 150 mm [Ø 1.1 x 5.91 in] Material: brass 2.0375	CTA9I-3R

Model	Description	Order code
CTD9350-165	**Insert, standard** Dimension: Ø 28 x 150 mm [Ø 1.1 x 5.91 in] Material: brass 2.0375	CTA9I-3R
CTD9350-165-X	**Insert, standard** Dimension: Ø 60 x 163 mm [Ø 2.36 x 6.42 in] Material: aluminium 3.4365	CTA9I-3M
CTD9350-165-X	**Insert, Air Shild** Dimension: Ø 60 x 152 mm [Ø 2.36 x 5.98 in] Material: aluminium 3.4365	CTA9I-3U
CTD9350-450	**Insert, standard** Dimension: Ø 60 x 150 mm [Ø 2.36 x 5.91 in] Material: aluminium 3.4365	CTA9I-3M
CTD9350-450	**Insert, Air Shild** Dimension: Ø 60 x 152 mm [Ø 2.36 x 5.98 in] Material: aluminium 3.4365	CTA9I-3V
CTD9350-700	**Insert, standard** Dimension: Ø 29 x 144 mm [Ø 1.14 x 5.67 in] Material: aluminium-bronze 2.0966	CTA9I-3S
CTD9350-700	**Insert, Air Shild** Dimension: Ø 29 x 144 mm [Ø 1.14 x 5.67 in] Material: aluminium-bronze 2.0966	CTA9I-3T

Inserts for model CTD9350-xxx, standard		Order code
Description [1)]		**CTA9I-xx**
	Undrilled insert	-N-
	Drilled insert Drilling depth: 145 mm [5.71 in]	-
	For thermometers up to 1.2 mm [0.05 in] diameter Bore diameter: 1 x 1.5 mm [1 x 0.06 in]	-1-
	For thermometers up to 1.6 mm [0.06 in] diameter Bore diameter: 1 x 2 mm [1 x 0.08 in]	-2-
	For thermometers up to 2.7 mm [0.11 in] diameter Bore diameter: 1 x 3 mm [1 x 0.12 in]	-3-
	For thermometers up to 3.2 mm [0.13 in] diameter Bore diameter: 1 x 3.5 mm [1 x 0.14 in]	-4-
	For thermometers up to 4.7 mm [0.19 in] diameter Bore diameter: 1 x 5 mm [1 x 0.20 in]	-5-
	For thermometers up to 6.3 mm [0.25 in] diameter Bore diameter: 1 x 6.5 mm [1 x 0.26 in]	-6-
	For thermometers up to 7.2 mm [0.28 in] diameter Bore diameter: 1 x 7.5 mm [1 x 0.30 in]	-7-
	For thermometers up to 8.2 mm [0.32 in] diameter Bore diameter: 1 x 8.5 mm [1 x 0.33 in]	-8-
	For thermometers up to 9.5 mm [0.37 in] diameter Bore diameter: 1 x 10 mm [1 x 0.39 in]	-9-
	For thermometers up to 3.2 mm [0.13 in] diameter Bore diameter: 1 x 5.0 mm and 1 x 3.5 mm [1 x 0.20 in and 1 x 0.14 in]	-I-
	For thermometers up to 6.3 mm [0.25 in] diameter Bore diameter: 1 x 5.0 mm and 1 x 6.5 mm [1 x 0.20 in and 1 x 0.26 in]	-X-
	Bore diameter: 1 x 3.2 mm and 1 x 6.3 mm [1 x 0.13 in and 1 x 0.25 in]	-A-

Inserts for model CTD9350-xxx, standard		Order code
Description [1]		**CTA9I-xx**
	Bore diameter: 2 x 3.2 mm, 1 x 4.2 mm, 1 x 6.3 mm, 1 x 8.4 mm and 1 x 9.9 mm [2 x 0.13 in, 1 x 0.17 in, 1 x 0.25 in, 1 x 0.33 in and 1 x 0.39 in]	-B-
	Bore diameter: 2 x 3.2 mm, 2 x 4.3 mm, 3 x 6.3 mm and 2 x 8.5 mm [2 x 0.13 in, 2 x 0.17 in, 3 x 0.25 in and 2 x 0.34 in]	-M-
	Bore diameter: 1 x 2.0 mm, 3 x 3.2 mm, 2 x 4.3 mm, 1 x 5.0 mm and 2 x 6.5 mm [1 x 0.08 in, 3 x 0.13 in, 2 x 0.17 in, 1 x 0.2 in and 2 x 0.26 in]	-Y-
-	Customer-specific special inserts available on request.	-?-
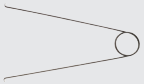	**Insert replacement tool**	-J-
Ordering information for your enquiry:		
	1. Order code: CTA9I-xx **2. Option:**	⇓ **[ ]**

1) The figures are an example and may, depending on the state of the art, change in design, material composition and representation.

Inserts for model CTD9350-xxx, Air Shield [1]		Order code
Description [2]		**CTA9I-xx**
	Undrilled insert	-N-
	Drilled insert Drilling depth: 145 mm [5.71 in]	-
	Bore diameter: 1 x 3.2 mm and 1 x 6.3 mm [1 x 0.13 in and 1 x 0.25 in]	-A-
	For thermometers up to 3.2 mm [0.13 in] diameter Bore diameter: 1 x 5 mm and 1 x 3.5 mm [1 x 0.2 in and 1 x 0.14 in]	-I-
	For thermometers up to 6.3 mm [0.25 in] diameter Bore diameter: 1 x 5 mm and 1 x 6.5 mm [1 x 0.2 in and 1 x 0.26 in]	-X-
	Bore diameter: 2 x 3.2 mm, 1 x 4.2 mm, 1 x 6.3 mm, 1 x 8.4 mm and 1 x 9.9 mm [2 x 0.13 in, 1 x 0.17 in, 1 x 0.25 in, 1 x 0.33 in and 1 x 0.39 in]	-B-
	Bore diameter: 2 x 3.2 mm, 2 x 4.3 mm, 3 x 6.3 mm and 2 x 8.5 mm [2 x 0.13 in, 2 x 0.17 in, 3 x 0.25 in and 2 x 0.34 in]	-M-
	Bore diameter: 1 x 2.0 mm, 3 x 3.2 mm, 2 x 4.3 mm, 1 x 5.0 mm and 2 x 6.5 mm [1 x 0.08 in, 3 x 0.13 in, 2 x 0.17 in, 1 x 0.2 in and 2 x 0.26 in]	-Y-
-	Customer-specific special inserts available on request.	-?-
	Insert replacement tool	-J-
Ordering information for your enquiry:		
	1. Order code: CTA9I-xx **2. Option:**	⇓ **[ ]**

1) The calibration can only be performed with an external reference. Suitable bore for the external reference must be available.
2) The figures are an example and may, depending on the state of the art, change in design, material composition and representation.

Scope of delivery

- Temperature dry-well calibrator model CTD9350
- Power cord, 1.5 m [5 ft] with safety plug
- Insert replacement tools
- PC and network cable
- USB stick with backup function
- Protective packaging / Transport protection
- Operating instructions
- Calibration certificate

Ordering information

Model / Temperature range / Protective conductor / Integrated measuring instrument / External reference thermometer / Calibration / Transport case / Power cord / Insert / Further approvals / Additional ordering information

© 09/2022 WIKA Alexander Wiegand SE & Co. KG, all rights reserved.
The specifications given in this document represent the state of the art at the time of publishing.
We reserve the right to make modifications to the specifications and materials.

WIKA Alexander Wiegand SE & Co. KG
Alexander-Wiegand-Straße 30
63911 Klingenberg/Germany
Tel. +49 9372 132-0
info@wika.de
www.wika.de