Monoflange
Process and instrument version
Model IVM

For further approvals
see page 10

Configurator

Standard articles

Applications

- Shut-off and venting of pressure measuring instruments
- Flange connection of instruments with threaded connections to pipelines or vessels
- For aggressive liquids, gases and vapours, also in aggressive environments
- Oil and gas industry, chemical and petrochemical industries, power plants, primary metals

Special features

- Compact design with low number of potential leakage points reduces overall weight
- Threaded mounting of bonnets not wetted to avoid seizure and leaks
- Smooth valve actuation, even under high pressure, leads to fault-free operation and long service life
- Metal valve seat with leak-tested tightness in accordance with BS6755 / ISO 5208 leakage rate A
- Instrument version for “fugitive emissions” according to TA-Luft and ISO 15848-1

Fig. left: Instrument version
Fig. right: Process version with OS&Y bonnet

Description

Due to its one-piece design, the model IVM monoflange can withstand high overpressures. It ensures a robust and compact mounting of the measuring instrument directly to the process flange. The use of metal and graphite seals allows working at high temperatures.

In combination with pressure measuring instruments, diaphragm seals or level measuring instruments, the valves are suitable for use in critical applications like refineries or steam generation systems. The IVM can be used for “fugitive emissions” in chemical applications or for processes with critical gases. The bubble-tight leak-tested metal seat makes these valves perfectly suitable for sour gases and natural gas processing or nitrogen production plants.

The super-finished machining of the internal parts, such as spindle and spindle tip, allows a very smooth and precise operation, even at high pressures, and avoids leaks or seizure of the valve. The OS&Y bonnet has been specifically developed in accordance with the highest international standards for the direct mounting of IVM monoflanges on pipelines or vessels.

WIKA offers the professional assembly of different instruments and valves into ready-to-install hook-up solutions.

Smart in sensing

Data sheets showing similar products:
Block-and-bleed valve, 2-valve manifold; models IV2; see data sheet AC 09.19
Valve manifold for differential pressure measuring instruments; models IV3, IV5; see data sheet AC 09.23

Specifications

Monoflange, model IVM	
Standards used	
Design	■ ASME B16.5, pipe flanges and flange fittings ■ ASME B16.34, valves - flanged, threaded and welding end ■ ASME B1.20.1, pipe threads, general purpose (inch) ■ ASME B31.1, power piping ■ ASME B31.3, process piping ■ ISO 17292, metal ball valves for petroleum, petrochemical and allied industries ■ MSS SP-99, valves for measuring instruments
Tests	■ API 598, valve inspection and testing ■ BS EN ISO 10497, type testing in accordance with fire safety requirements ■ ISO 5208, pressure testing of metallic valves with leakage rate A ■ MSS SP-61, pressure testing of valves ■ DIN EN 12266-1, pressure tests, test procedures and acceptance criteria for industrial valves
Material requirements	■ NACE MR0175 / ISO 15156, use in H_2S-containing environments in oil and gas production ■ NORSOK M-630, specificaiton for use in pipelines (Norway)
Marking	MSS SP-25, marking on valves
Function (for functional diagram, see next page)	■ Block (shut off) - 1 x bonnet for shutting off the process ■ Block and bleed (shut off and vent) - 1 x bonnet for shutting off the process - 1 x standard bonnet for venting ■ Double block and bleed (2 x shut off and 1 x vent) - 2 x bonnets for shutting off the process - 1 x standard bonnet for venting
Version	■ Process version (with OS&Y bonnet on the process side) ■ Instrument version (with standard bonnet on the process side)
Process connection (see page 8 ff.)	■ Flange ½" … 2" / class 150 … class 2500, following ASME B16.5 ■ Flange DN 15 … DN 25 / PN 16 … PN 100, following EN 1092-1
Surface roughness Ra of the sealing face	
Following ASME B16.5	■ RF: 3.2 ... 6.3 µm [125 ... 250 µin] (spiral surface) ■ RJ: 1.6 µm [63 µin]
Following EN 1092-1	■ Form B1: 3.2 ... 6.3 µm [125 ... 250 µin] ■ Form B2: 0.8 ... 3.2 µm [32 ... 125 µin]
Instrument connection (see examples on page 7)	■ 1 x ½" NPT female, axial ■ 1 x ½" NPT female, swivel adapter, axial ■ 2 x ½" NPT female, 1 x radial and 1 x axial [1)] ■ 2 x ½" NPT female, 1 x swivel adapter, radial and 1 x axial [1)] ■ Connecting flange
Vent connection	■ Without ■ ¼ NPT female, plug screw is included in delivery, though not pre-fitted. ■ ½ NPT female, plug screw is included in delivery, though not pre-fitted.

1) Axial and/or radial instrument connection can be used. Optionally, one measuring instrument connection can be closed with the supplied plug screw.

Functional diagram

Block (shut off)

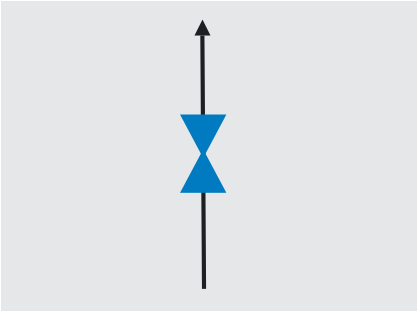

Block and bleed (shut off and vent)

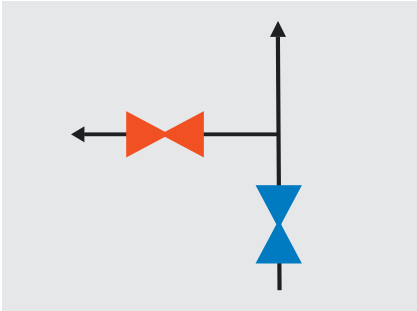

Double block and bleed (2 x shut off and 1 x vent)

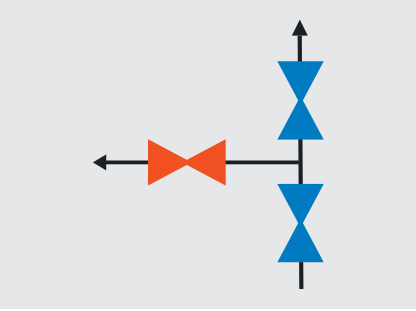

Colour code Blue: Shut off
Red: Vent

Materials	
Wetted parts	
Valve body	■ Stainless steel 316/316L (1.4401/1.4404) ■ Duplex F51 (1.4462) ■ Super Duplex F55 (1.4501) ■ Hastelloy C276 (2.4819) ■ Monel 400 (2.4360) ■ Carbon steel ASTM A350 LF2, class 2 [1)]
Bonnet body, spindle tip	■ Stainless steel 316/316L (1.4401/1.4404) ■ Duplex F51 (1.4462) ■ Super Duplex F55 (1.4501) ■ Hastelloy C276 (2.4819) ■ Monel 400 (2.4360)
Sealing packing	■ PTFE ■ Graphite ■ RTFE Reinforced PTFE, material for optional certificate “Emission protection in accordance with TA-Luft (VDI 2440) and ISO-15848-1”
Non-wetted parts	
Gland packing, gland nut, yoke, valve spindle, seal bush, threaded bolt with nut	Stainless steel
Handle	■ Stainless steel ■ Stainless steel 316/316L (1.4401/1.4404)

1) Valve body from carbon steel ASTM A350 LF2, the other wetted parts from stainless steel 316/316L (1.4401/1.4404). Unpainted carbon steel valves have an oil finish for corrosion protection during storage. This is not a substitute for paint or other protective coating to be applied at the place of use.

Other materials on request

Bonnet versions

Standard

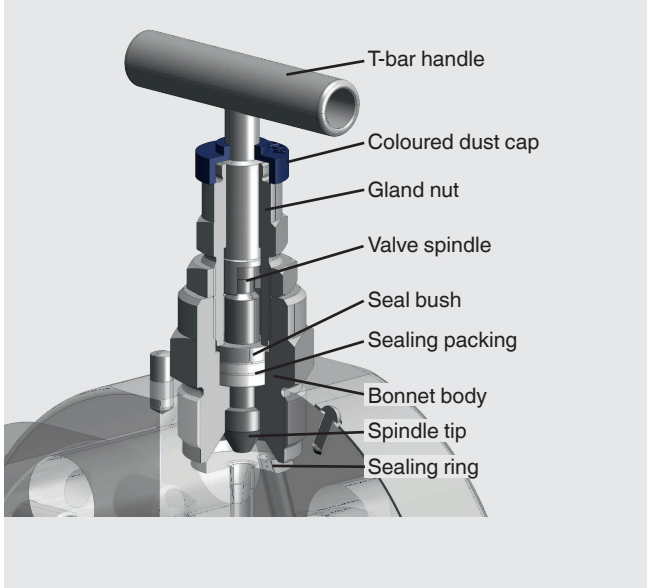

OS&Y

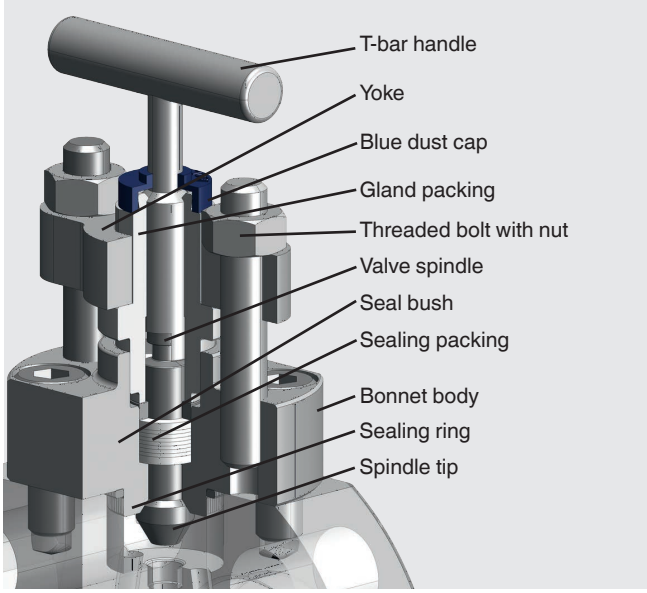

Specification	Standard bonnet	OS&Y bonnet
Standards complied with	■ ASME VIII div. 1 and MSS SP-99 ■ TA-Luft (VDI 2440) and ISO-15848-1 (option)	■ ASME VIII div. 1 and ASME B31.1, ASME B31.3 ■ API 607, ISO 10497, BS 6755-2
Dust cap colour code	Blue: Shut off Red: Vent	
Spindle tip	Non-rotating, low-wear, blow-out-safe	
Valve seat	Metal-to-metal, back seat design	
Valve bore size	5 mm [0.197 in]	

Bonnet options

Anti-tamper version

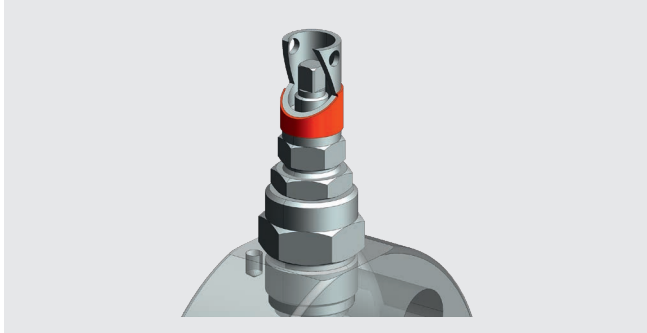

Anti-tamper version with padlock

Anti-tamper key

1) The anti-tamper key is not included in delivery of the anti-tamper version, but available as accessory.

Pressure-temperature diagram

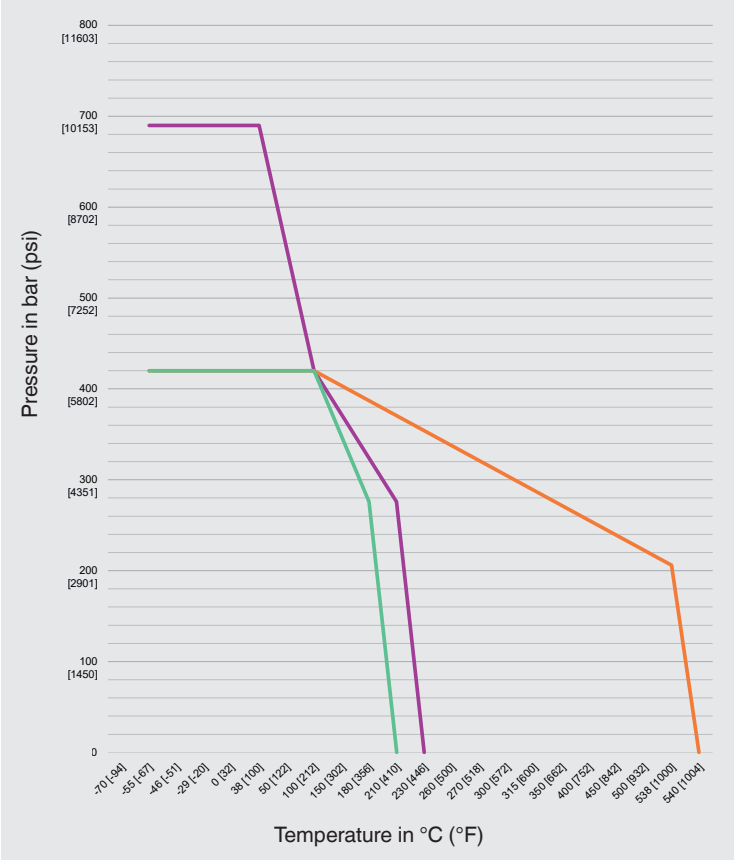

Material of the sealing packing	Max. permissible operating pressure in bar at temperature in °C	Max. permissible operating pressure in psi at temperature in °F
PTFE	690 bar at 38 °C	10,000 psi at 100 °F
	276 bar at 210 °C	4,000 psi at 410 °F
Graphite	420 bar at 38 °C	6,000 psi at 100 °F
	209 bar at 538 °C	3,030 psi at 1,000 °F
RTFE 1)	420 bar at 38 °C	6,000 psi at 100 °F
	276 bar at 180 °C	4,000 psi at 356 °F

1) Reinforced PTFE, material for optional certificate “Emission protection in accordance with TA-Luft (VDI 2440) and ISO 15848-1”

The minimum design temperature is -54 °C [-65 °F].
For continuously low operating temperatures ≤ -54 °C [≤ -65 °F] a special design is needed.

Installation examples

Instrument version

Horizontal flange arrangement

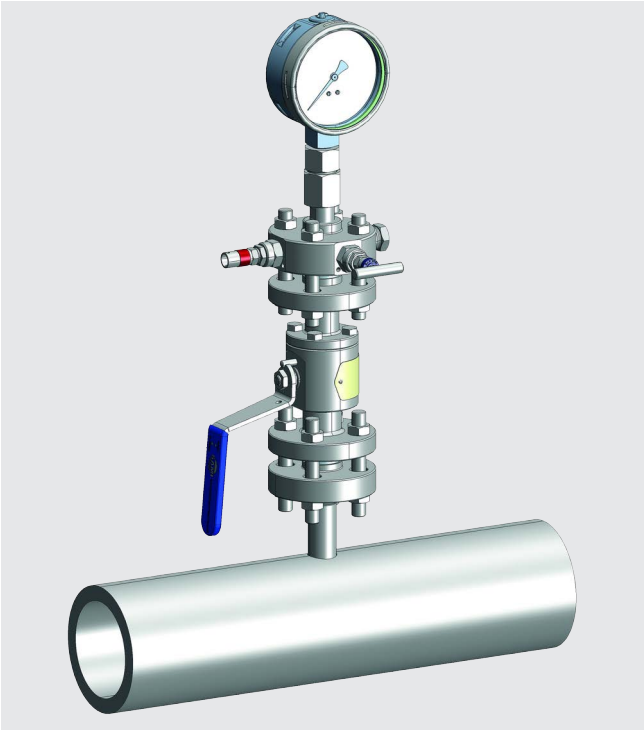

Vertical flange arrangement

Instrument monoflanges are, as shown, installed behind an initial shut-off device. Process monoflanges are designed with an OS&Y bonnet for the process-side shut-off. The broad design of the passage geometries of the OS&Y bonnet prevents clogging through particle accumulation. With the use of process monoflanges, the purchase of traditional shut-off devices can be saved.

Process version

Horizontal flange arrangement

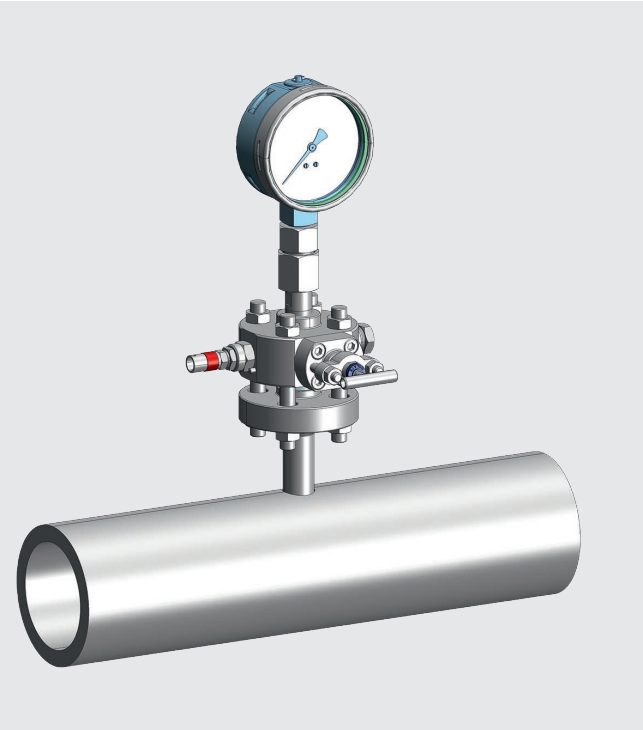

Vertical flange arrangement

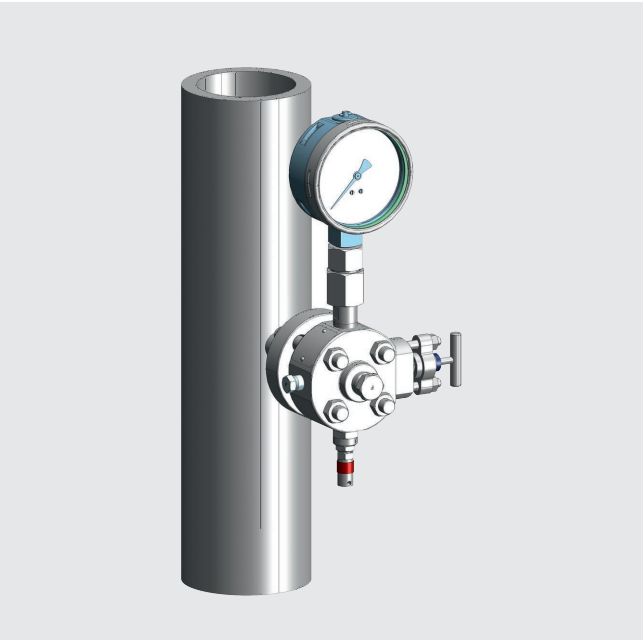

The monoflange assembly enables the integration of up to three bonnets with compact dimensions. Flange connections are advantageous for frequent maintenance and service operations and for applications with hazardous media.

Examples for process connection and instrument connection

Process and instrument connection: Flange

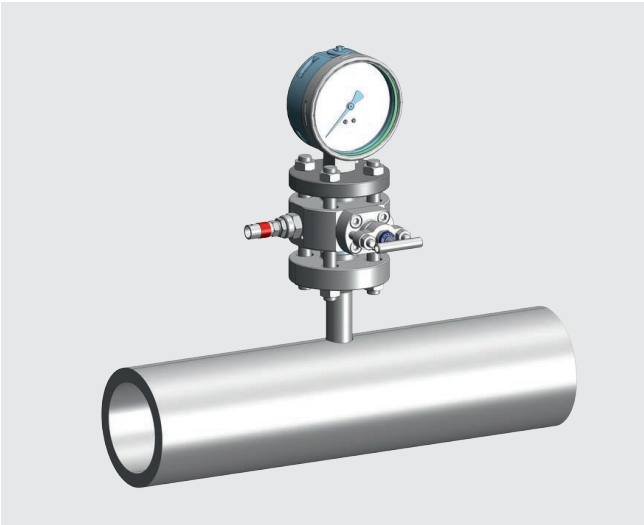

Process connection: Flange
Instrument connection: Swivel adapter, axial

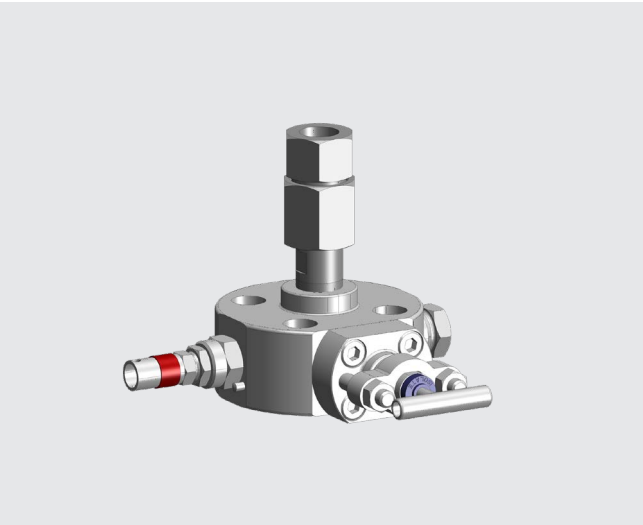

Model IVM, process version

Block

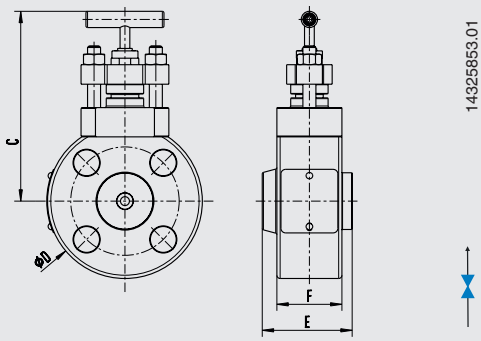

Double block and bleed, up to DN 2" Class 150

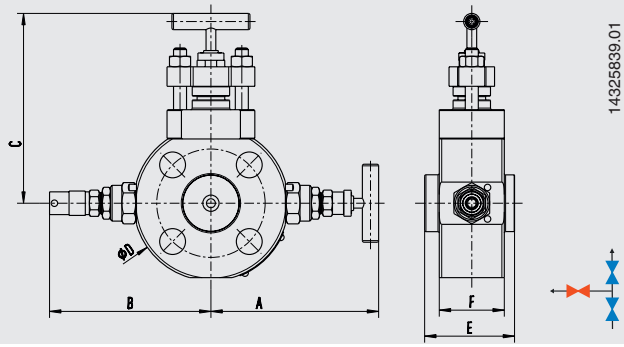

Block and bleed, up to DN 2" Class 150

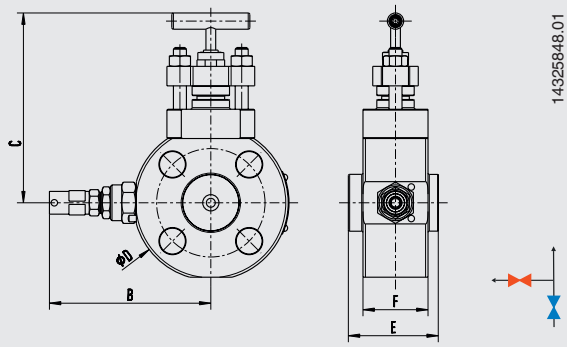

Monoflange design from DN 2" Class 300 and higher

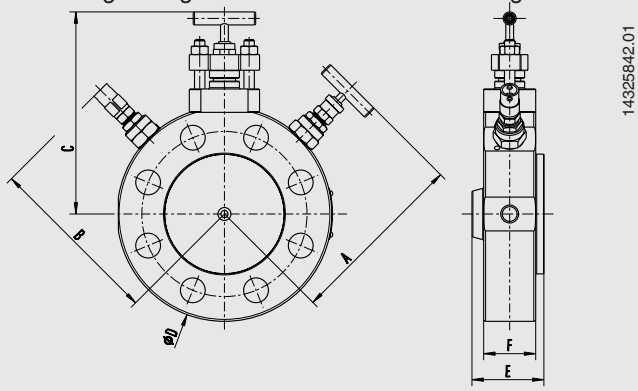

Flange connection per ASME B 16.5

DN	Class	Dimensions in mm [in]							x [1]	Weight kg [lb]
		A	B	C	Ø D	E for RF	E for RJ	F		
½"	150	100 [3.94]	96 [3.78]	113 [4.45]	88.9 [3.5]	50.6 [2]	-	40 [1.57]	4	0.7 [1.45]
½"	300/600	103.2 [4.06]	99.3 [3.91]	116.8 [4.60]	95.2 [3.75]	55.4 [2.18]	54.5 [2.15]		4	0.8 [1.8]
½"	900/1500	116 [4.57]	112.3 [4.42]	131.4 [5.17]	120.6 [4.75]	55.4 [2.18]	55.4 [2.18]		4	1.3 [2.95]
½"	2500	121 [4.76]	117 [4.61]	138.5 [5.45]	133.3 [5.25]	55.4 [2.18]	55.4 [2.18]		4	1.7 [3.71]
¾"	150	105 [4.13]	101 [3.98]	118.8 [4.68]	98.4 [3.87]	50.6 [2]	-		4	0.9 [1.9]
¾"	300/600	115 [4.53]	110.8 [4.36]	129.6 [5.10]	117.5 [4.62]	55.4 [2.18]	55.4 [2.18]		4	1.3 [2.8]
¾"	900/1500	121 [4.76]	117 [4.61]	136.7 [5.38]	130.2 [5.12]	55.4 [2.18]	55.4 [2.18]		4	1.6 [3.5]
¾"	2500	122 [4.80]	118 [4.65]	142 [5.59]	139.7 [5.5]	55.4 [2.18]	55.4 [2.18]		4	1.9 [4.2]
1"	150	109.8 [4.32]	106 [4.17]	124.2 [4.89]	107.9 [4.25]	50.6 [2]	55.4 [2.18]		4	1.1 [2.4]
1"	300/600	118 [4.65]	114 [4.49]	133 [5.24]	123.8 [4.87]	55.4 [2.18]	55.4 [2.18]		4	1.5 [3.3]
1"	900/1500	130.8 [5.15]	127 [5]	147 [5.79]	149.2 [5.87]	55.4 [2.18]	55.4 [2.18]		4	2.1 [4.7]
1"	2500	135.6 [5.34]	132 [5.20]	152 [5.98]	158.7 [6.25]	55.4 [2.18]	55.4 [2.18]		4	2.5 [5.5]
1 ½"	150	119.5 [4.70]	115.6 [4.55]	135 [5.31]	127 [5]	50.6 [2]	55.4 [2.18]		4	2.4 [5.3]
1 ½"	300/600	134 [5.28]	130 [5.12]	150.2 [5.91]	155.6 [6.12]	55.4 [2.18]	55.4 [2.18]		4	2.4 [5.3]
1 ½"	900/1500	146.5 [5.77]	142.6 [5.61]	163 [6.42]	177.8 [7]	55.4 [2.18]	55.4 [2.18]		4	3.2 [7.1]
1 ½"	2500	158 [6.22]	154 [6.06]	174.7 [6.88]	203.2 [8]	55.4 [2.18]	56.9 [2.24]		4	5.4 [11.8]
2"	150	132.5 [5.22]	128.6 [5.06]	148.7 [5.85]	152.4 [6]	50.6 [2]	55.4 [2.18]		4	2.4 [5.2]
2"	300/600	138.9 [5.47]	135 [5.31]	155.5 [6.12]	165.1 [6.5]	55.4 [2.18]	56.9 [2.24]		8	2.8 [6.1]
2"	900/1500	164.6 [6.48]	161 [6.34]	182 [7.17]	215.9 [8.5]	55.4 [2.18]	56.9 [2.24]		8	4.8 [10.5]
2"	2500	174 [6.85]	170.2 [6.70]	191.5 [7.54]	234.9 [9.25]	66.2 [2.61]	67.7 [2.67]		8	7.1 [15.7]

1) Number of screws

Plug screw for vent connection is included in delivery, though not pre-fitted.

Model IVM, instrument version

Block

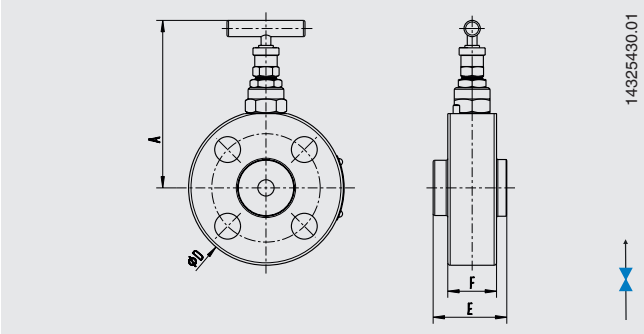

Double block and bleed, up to DN 2" Class 150

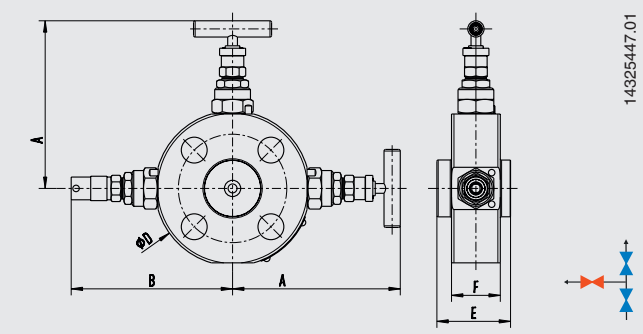

Block and bleed, up to DN 2" Class 150

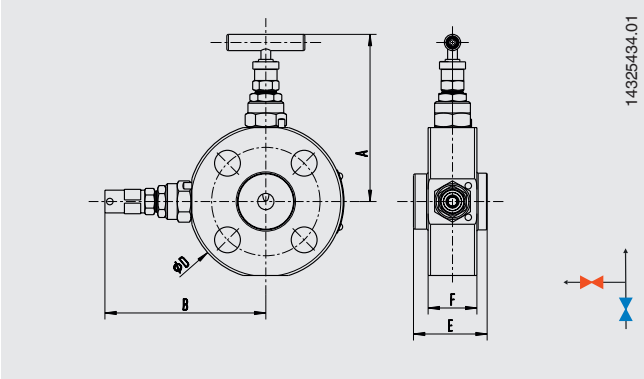

Monoflange design from DN 2" Class 300 and higher

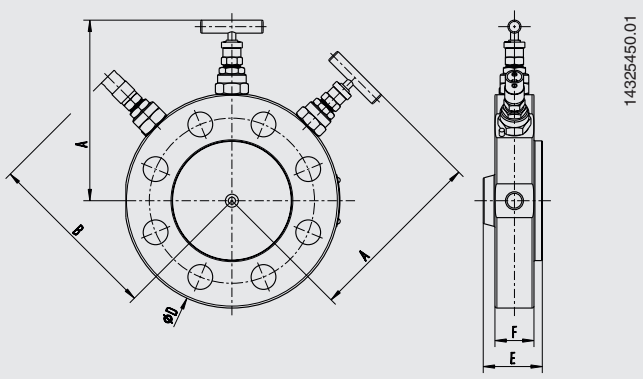

Flange connection per ASME B 16.5

DN	Class	Dimensions in mm [in]						x [1]	Weight kg [lb]
		A	B	Ø D	E for RF	E for RJ	F		
½"	150	99.9 [3.9]	96 [3.7]	88.9 [3.5]	40.6 [1.6]	-.	30 [1.2]	4	0.5 [1.15]
½"	300/600	103.2 [4.1]	99.3 [3.9]	95.2 [3.75]	45.3 [1.8]	44.5 [1.7]	30 [1.2]	4	0.5 [1.2]
½"	900/1500	116.3 [4.6]	112.4 [4.4]	120.6 [4.75]	45.3 [1.8]	45.3 [1.8]	30 [1.2]	4	1 [2.2]
½"	2500	122.8 [4.8]	118.9 [4.7]	133.3 [5.25]	45.4 [1.8]	45.4 [1.8]	30 [1.2]	4	1.3 [2.9]
¾"	150	104.9 [4.1]	101 [3.9]	98.4 [3.87]	40.6 [1.6]	-	30 [1.2]	4	0.7 [1.5]
¾"	300/600	114.7 [4.5]	110.8 [4.4]	117.5 [4.62]	45.4 [1.8]	45.4 [1.8]	30 [1.2]	4	0.7 [1.5]
¾"	900/1500	121.2 [4.8]	117.3 [4.6]	130.2 [5.12]	45.4 [1.8]	45.4 [1.8]	30 [1.2]	4	1.2 [2.7]
¾"	2500	126 [4.9]	122.1 [4.8]	139.7 [5.5]	47.1 [1.8]	47.1 [1.8]	31.7 [1.25]	4	1.6 [3.5]
1"	150	109.8 [4.3]	105.9 [4.2]	107.9 [4.25]	40.6 [1.6]	45.3 [1.8]	30 [1.2]	4	1 [2.1]
1"	300/600	118 [4.6]	114 [4.5]	123.8 [4.87]	45.4 [1.8]	45.3 [1.8]	30 [1.2]	4	1.2 [2.6]
1"	900/1500	130.9 [5.1]	127 [5.0]	149.2 [5.87]	45.4 [1.8]	45.4 [1.8]	30 [1.2]	4	1.6 [3.6]
1"	2500	135.4 [5.3]	131.5 [5.2]	158.7 [6.25]	50.4 [2.0]	50.4 [2.0]	35 [1.4]	4	2.5 [5.5]
1 ½"	150	119.6 [4.7]	115.7 [4.6]	127 [5]	40.6 [1.6]	45.4 [1.8]	30 [1.2]	4	1.4 [3]
1 ½"	300/600	134 [5.3]	130 [5.1]	155.6 [6.12]	40.6 [1.6]	45.4 [1.8]	30 [1.2]	4	1.8 [4]
1 ½"	900/1500	146.5 [5.8]	142.6 [5.6]	177.8 [7]	47.2 [1.9]	47.2 [1.9]	31.8 [1.2]	4	3.5 [7.7]
1 ½"	2500	158.1 [6.2]	154.2 [6.1]	203.2 [8]	60.1 [2.3]	61.6 [2.4]	44.7 [1.76]	4	4.8 [10.6]
2"	150	132.5 [5.2]	128.6 [5.1]	152.4 [6]	40.6 [1.6]	45.4 [1.8]	30 [1.2]	4	1.8 [3.9]
2"	300/600	138.9 [5.5]	135 [5.3]	165.1 [6.5]	45.4 [1.8]	46.9 [1.85]	30 [1.2]	8	1.8 [4]
2"	900/1500	164.6 [6.5]	160.7 [6.3]	215.9 [8.5]	53.5 [2.1]	55 [2.2]	38.1 [1.5]	8	4.7 [10.3]
2"	2500	174 [6.85]	170.1 [6.7]	234.9 [9.25]	66.2 [2.6]	67.7 [2.7]	50.8 [2.0]	8	7.4 [16.3]

1) Number of screws

Plug screw for vent connection is included in delivery, though not pre-fitted.

Approvals

Logo	Description	Country
EAC	**EAC (option)** Machinery directive	Eurasian Economic Community
-	**CRN** Safety (e.g. electr. safety, overpressure, ...)	Canada

Manufacturer‘s information and certificates

Logo	Description
-	**PMI [1] test certificate (option)** Valve body
-	**Certificate for oxygen versions (option)** - Oil and grease free for oxygen per ASTM G93 level C - Sealing packing [2] and lubricants in accordance with BAM requirements - Limits of the permissible operating ranges for pressure and temperature: 420 bar at 60 °C or 6,000 psi at 140 °F 90 bar at 200 °C or 1,305 psi at 392 °F
-	**Emission protection in accordance with TA-Luft (VDI 2440) and ISO-15848-1 (option) [3]** - Tightness class: AH - Endurance class: C01 - Temperature class: -29 ... +180 °C [-20 ... +356 °F]
-	**Type tested for fire safety in accordance with API 607, ISO 10497, BS 6755-2 [4]**

1) Positive material identification
2) PTFE or graphite
3) Only for standard bonnet
4) Only for OS&Y bonnet

Certificates

- 3.1 inspection certificate per EN 10204
  - Material certificate for the valve body per NACE MR0103/MR0175
  - Confirmation of pressure tests per API 598 [5]
- 3.1 inspection certificate per EN 10204 (option)
  - Material certificate for all wetted parts per NACE MR0103/MR0175
  - Confirmation of pressure tests per API 598 [5]

5) Shell test: 15 s test duration with 1.5 times the permissible working pressure
Seat test: 15 s test duration with 1.1 times the permissible working pressure

Standard articles

Configurator

© 02/2018 WIKA Alexander Wiegand SE & Co. KG, all rights reserved.
The specifications given in this document represent the state of engineering at the time of publishing.
We reserve the right to make modifications to the specifications and materials.

04/2026 EN PUBLIC

WIKA Alexander Wiegand SE & Co. KG
Alexander-Wiegand-Straße 30
63911 Klingenberg/Germany
Tel. +49 9372 132-0
info@wika.com
www.wika.com